A GUIDELINE OF APPLYING CHINESE CALLIGRAPHY CULTURE TO CONTEMPORARY FURNITURE DESIGN

by

Yiyi Ye

A thesis submitted to the Graduate Faculty of
Auburn University
in partial fulfillment of the
requirements for the Degree of
Master of Industrial Design

Auburn, Alabama
May 4, 2019

Keywords:
Contemporary, Furniture design, Chinese calligraphy culture, design guideline

Approved by

Tin-Man Lau, Chair, Professor of Industrial Design
Shea Tillman, Associate Professor of Industrial Design
Christopher Arnold, Associate Professor of Industrial Design

Abstract

In the information age, information dissemination is fast and broad. How to maintain the vitality of national culture under the impact of various foreign cultures is very important to guarantee spiritual and cultural sovereignty. Finding new meanings and new forms of traditional culture in the new era is one of the main methods of inheriting and developing culture.

Due to the relatively late appearance of industrial design, current Chinese cultural design has many problems. Meanwhile, contemporary China lacks the recognition of its own national culture and the ability to appreciate the beauty of Chinese traditional culture. Chinese calligraphy culture is closely related to the development of Chinese culture, and at the same time, is one of the forms that best reflects the aesthetics of Chinese culture. This thesis combines Chinese calligraphy culture and furniture design to find a way to stylize Chinese culture, and develop Chinese style furniture. It is an experiment about seeking a new form of Chinese calligraphy culture in today's life.

This study focuses on the following aspects: cultural design, Chinese calligraphy culture, the definition of culturally a distinctive design style, and today's furniture design. The thesis will conclude with a method of using Chinese calligraphy culture as an element to stylize Chinese culture, and apply it to furniture design to create the "new" Chinese style furniture that meets current living needs and design aesthetics. Designers who are not familiar with Chinese calligraphy culture can use this design tool to design Chinese style furniture with Chinese calligraphy as an element. If they wish to develop design tools by using other calligraphy cultures or by applying Chinese calligraphy culture to other product categories, they can also refer to this thesis.

Acknowledgement

Here and now, I would like to extend my sincere thanks to all those who have helped me make this thesis possible and better.

I would like to thank Professor Tin-Man Lau for his guidance. His love of traditional culture and his support for cultural design have inspired me to study this subject with a sense of responsibility of the designer. Also, thanks to Professor Shea Tillman and Professor Christopher Arnold for their understanding and support of Chinese cultural design issues, I really appreciate their understanding and support.

Thanks to my calligraphy teacher, Mr. Lei Jiejun, for his enlightenment from childhood, so that I have the opportunity to complete this thesis of the relevant field after so many years.

Thanks to Professor John Morgan for his kind suggestion and encouragements when I started this study.

Thanks to Professor Randy Bartlett for his instant help and support.

Thanks to Mr. David Gowan, Mr. Robert Capps, Mr. Mark Dorsey and Mr. Vann Knight for their kind help when I made the full size model.

Thanks to all the professors, classmates and friends who helped me during this research.

Finally, I want to thank my parents for their encouragement and unselfish love for me.

Table of Contents

List of Figures

Chapter 1

Introduction

1.1 Problem Statement

The contradiction between the globalization of the world and the preservation of cultural diversity.

"Cultural globalization" is a theme of the contemporary era. Moalosi, Popovic and Hickling-Hudson (2005) hold the viewpoint that globalization strives for cultural compatibility and undermines the diversity of its processes by denying or neglecting cultural identity. The world functions like a large bowl, mixing different cultures. In fierce competition and cultural collision, some cultures will be gradually assimilated, while others may maintain their own personality and continue to grow and develop in the process of adapting to the new era. If one culture is not competitive enough, it will likely have a survival crisis sooner or later.

Although there is a contradiction between cultural diversity and globalization, maintaining cultural diversity does not violate the theme of the current era. Moalosi, Popovic and Hickling-

Hudson (2007) agree globalization is a force that opposes culture diversity. Globalization leads to the unification of user culture through the standardization of products. But the researchers also obseve that in response to globalization, there is a reverse trend in design that promotes local identity and highlights cultural values and traditions. Therefore, globalization has triggered a new understanding of cultural identity. Moreover, contacts among different cultures in some cases do not necessarily generate a cultural standardization, but rather they often provoke an exacerbation of difference and the process of globalization is imposed on users. Therefore, as international influences and exchanges increase, there is an outburst of attitudes in defense of national and regional identities, and manifestations of the fear of mixing of races, religions, customs, and habits. This kind of anxiety stems from people's awareness of their lack of recognition of their own culture, and the fact that traditional culture has not been recently developed in modern society. Obviously, this kind of emotion can lead people more to not appreciate traditional Culture.

Therefore, finding ways to adapt culture to the developing era is a meaningful topic and it is also a key to solving the cultural survival issue. This thesis is an exploration that uses calligraphy

to find a possible way to create Chinese-style design. It is an attempt to visualize traditional culture and make it conform to the current era.

The issue of traditional Chinese cultural heritage.

At present, the established relationship between Chinese design and the traditional culture is relatively simple and preliminary. Only a small part of the culture is used in the design of certain types of industries. The reason for this situation is that western countries industrialized and urbanized first (History.com Staff, 2009, p. 1), and, as a consequence developed the discipline of industrial design first. Furthermore, "'Global Westernization' is the most prominent characteristic of the 20th century. World culture, design, and art lean towards the western" (Goh, 2005, p. v). Therefore, China was influenced by Western culture when developing industry and industrial design, which minimized the influence of traditional Chinese culture in modern Chinese industries.

China's contemporary cultural design issues.

Most Chinese today do not know how to appreciate the elegant aesthetic and the practical usage of antique Chinese furniture. They are losing their appreciation of the original Chinese beauty (Clunas, 1988).

People-oriented design needs to take users cultural requirements into account. According to Popovic, Vesna's *Activity and designing pleasurable interaction with everyday artifacts*, Richie Moalosi, Vesna Popovic and Anne Hickling-Hudson (2007) summarized user's cultural needs:

> (i) the interface and human interaction should support the user culture; (ii) the artifact form or shape should correspond to the culture and life cycle which conforms to the appropriate aesthetics; (iii) the artifact form or shape should convey humor or joy of that particular cultural setup; (iv) appropriate colors should be used to evoke desirable feelings within the same cultural context and; (v) flexibility and adaptability of interaction should be related to culture. (Moalosi, Popovic, & Hickling-Hudson, 2007, p. 6)

The main significance of cultural design is that it can meet the cultural needs of users. Therefore, analyzing the existing Chinese style according to this standard can more clearly point

out the problem in its cultural design. The following section will provide a brief analysis of existing Chinese-style designs with reference to this standard.

Figure 1 Chinese style design case 1.

This set of furniture is made of solid wood, and is in accordance with the selection habits. The form and shape of the furniture refer to the ancient Chinese furniture style: the design of the drawer at the armrest of the sofa originated from the ancient period when the house did not clearly divide the private space and the public space. Now the house clearly divides the space according to the function, so this design is not suitable for today's families. In addition, the details refer to the Chinese cultural symbols: a large number of regular hexagons are used as the main design elements, fortuitously the middle coffee table, which resembles the ancient Chinese

wells, which is reminiscent of The Eight Diagrams (positive octagon). But the theme of Chinese party culture is to share: It is customary to put tea and snacks on the coffee table. Everyone sits around and reaches out to get the food on the coffee table. Obviously, such a design cannot meet the above-mentioned hospitality needs.

Figure 2 Chinese style design case 2.

Yen Chen-Ching ‘s Condolence for My Dear Nephew is one of the best running script manuscripts of the world. The Rice crackers package and saucer are designed from this

masterpiece. At that time, Yen Chen-Ching's nephew was beheaded and died young. The families could not find the complete body and only brought back his head. Facing the head of his nephew, thinking of the cruel execution, Yen Chen-Ching wrote this work with grief. Even if you don't know the meaning of these Chinese characters, you can feel his anger and sorrow through the strokes and the layout. It can be said that this manuscript contains Yen Chen-Ching's blood and tears. So, do you still have an appetite? Without correct understanding and enough respect, these designs have caused public outrage.

It can be seen that the existing Chinese style design often cannot meet the cultural needs of users, and can even be said to directly copy the traditional design, or impose it on modern products without meaning. A truly effective cultural design should be based on the cultural needs of the user.

1.2 Need for Study

Culture: The significance of cultural development.

Culture is conceived as a coherent body of beliefs and practices which are dynamic and changing within particular historical periods. It is a dynamic body of value systems that are

altered by social change. “It is dialectic and incorporates new forms and meanings while changing or reshaping traditional ones.” (Moalosi, Popovic, & Hickling-Hudson, 2007, pp. 2-3). The best way to inherit traditional culture is to find new forms and meanings of existence in the new era, so the studies on culture will likely never cease.

Economy: The market has great potential.

On one hand, the market has corresponding demand for culture-related products but there are always vacancies. On the other hand, the combination of design and culture can increase product competitiveness.

Moalosi, Popovic and Hickling-Hudson (2007) observe that there are voices within design lamenting the loss of culture, traditions, and ethnicity. Applying cultural factors to design not only makes technology more suitable for its social context, but also makes better use of culture itself as an innovative resource (Moalosi, Popovic, Hudson, & Kumar, 2005). Products are symbols, establishing positive frames of mind, reminding the user of a pleasant memory, and acting as an expression of the user's identity (Norman, 2004).

Society: The importance of cultural heritage and development for social development.

Globalization makes culture the most important asset (Lee, 2004). Users are not just physical and biological beings, but socio-cultural beings (Baxter, 1999). Culture is an important part of society. Moalosi, Popovic, and Hickling-Hudson (2007) view culturalization of products as a counterbalancing force for the maintenance and durability of national cultures facing globalization, as well as a potential capacity for holding, preserving and presenting cultural values to the respective product users. The development of society will create a new culture. If globalization is maintained blindly without balancing the development of each nation's traditional culture, the ultimate result will be uncultured. If traditional culture is developed, it can also promote social development. Society and culture are developing together and mutually influencing each other.

Development: Academic significance.

The in-depth research and appropriate methods to assist designers on how culture can be consciously integrated in product design is lacking (Moalosi, Popovic, & Hickling-Hudson, 2007). The lack of corresponding education is also one of the reasons for causing the development issues of cultural design products. Therefore, the development of cultural design

tools can encourage designers to consciously carry out cultural design. When focusing on these issues, designers will actively think about developing other cultural design tools. Such a virtuous cycle could promote the development of cultural design education. The teaching and thinking of cultural heritage in education are of great significance for maintaining the independence of a national spirit.

1.3 Objective of Study

- To study Chinese calligraphy culture.
- To study the definition of a design style.
- To study the influence factors of cultures on design styles.
- To study the daily needs of furniture in contemporary life.
- To study the combination of contemporary furniture manufacturing and new technology.
- To compile a series design factors to help designers develop a piece of furniture that is suited to contemporary life but in a certain Chinese calligraphy style.
- To apply the design guideline in several furniture designs.

1.4 Assumptions of Study

1) Culture can be stylized in design.

2) Chinese calligraphy is one of the easiest ways for Chinese to appreciate beauty.

3) Designers who are not very familiar with Chinese culture can create products in a Chinese style.

4) Applying symbols that are abstracted from calligraphy in design is one way to stylize Chinese culture.

5) Calligraphy culture can be abstracted as visible symbols and applied in furniture design.

1.5 Scope and Limitations

This study was conducted based on the following scope and limits:

1) For this study, the scope will be limited to Chinese calligraphy.

2) Chinese calligraphy has a long history. There are different representative fonts in different periods. Different fonts have different representative calligraphers (But there are several particularly prominent and meaningful representatives). Therefore, the study

of this thesis cannot cover each font and the art style of each representative calligrapher's work.

3) This study focusses on 4 main Chinese calligraphy fonts: official script(隶书), regular script(楷书), running script(行书), and cursive script(草书).

4) Each font is associated with many cultural backgrounds. This study focusses on the most obvious and representative cultural characteristics of the target fonts.

5) This study only gives brief introductions of target fonts and their related culture.

6) Due to the characteristics of the research subject, there will be Chinese literature for reference.

1.6 Procedures and Methods

1) Confirm components.

2) Confirm overall shape.

3) Build structure.

4) Add connections (optional).

5) Assemble blocks to the structure.

6) Test and refine.

7 Final design plan.

1.7 Anticipated Outcomes

The primary outcome of this study to briefly introduce knowledge about Chinese calligraphy culture and the contemporary technology of furniture manufacture and providing a design guideline for designers to create Chinese style furniture for modern life. A practical product will be developed from the preliminary sketch based on the design guideline.

Using calligraphy, however is just an exploration for finding one possible way to create a Chinese style design. From a macro perspective, this thesis sums up a method to stylize cultural through visual language. The ultimate goal is to carry forward the traditional Chinese culture in contemporary society. Moreover, this thesis can be used as a reference for stylizing other distinctive cultural aspects for use in product design.

Chapter 2

Literature Review

2.1 Cultural Design

2.1.1 Culture, Aesthetics and Design

2.1.1.1 Culture and Design

The early connections between culture and design became apparent in the field of social anthropology, in which civilization was assessed by the evolution of objects and traced through the cultural features left by these objects. Culture produces diversity, which is naturally revealed in all human action, such as the products people design. The relationship between design and culture has taken many twists and turns throughout the last centuries, as design is seen both as a mirror and an agent of change (Moalosi, Popovic, Hudson, & Kumar, 2005). Modifications in design's evolution both reflect and determine developments in the Culture. Design changes culture and at the same time is shaped by it (Röse, 2004). Moreover, the major characteristics that designers bring to products can decide the hierarchy of 'national cultural values', like Italian

aesthetic aspects, German quality, English comfort, French innovation (De Souza & Dejean, 1999).

> A culture consists of patterned ways of thinking, feeling and reacting, acquired and transmitted mainly by symbols, constituting the distinctive achievements of human groups, including their embodiments in artefacts; the essential core of culture consists of traditional (i.e., historically derived and selected) ideas and especially their attached values. The influence of culture on products is an iterative process; culture has an influence on choice, utilization and conception of the product. The product influences culture since it brings about changes in habits, values and modes of production. Cultural characteristics play some roles in perceiving subjective preferences in design. (De Leur, Drukker, Christiaans, & Rijk, 2006, p. 17).

In product design, incorporating the historical and aesthetic values of users can achieve the goal of cultural respect (Moalosi, Popovic, Hudson, & Kumar, 2005). Combining design with culture can generate user experiences (Yang, 2003).

2.1.1.2 The Value of Beauty

“The beautiful has a commercial or money value. We may even say that art can lend to an object a value greater than that of the material of which it consists” (Dresser, 2003, p. 29). As the saying goes: “beauty is in the eyes of the beholder”, and cultural background is one of the factors that affect a person's aesthetic and taste because "culture" contains lots of information about values, ideals, concepts, and expected behaviors. For culturally related objects, values and practices, people tend to be more concerned and cause greater reactions (Brislin, 1993).

2.2 Chinese Calligraphy Culture

2.2.1 Chinese Calligraphy and Chinese Culture

The reason why Chinese calligraphy culture can be one of the research objects for developing design tools of stylizing Chinese Culture.

Mr. Lin Yutang (1936), a famous Chinese scholar, said: "Calligraphy provides the Chinese people with basic aesthetics. The Chinese people learn the basic concepts of lines and forms through calligraphy. Therefore, if you do not understand Chinese calligraphy and its artistic inspiration, you cannot talk about the art of China." (p. 275)

Chinese calligraphy culture has a very stable system. “Chinese calligraphy is an art with an illustrious tradition as old as culture itself. For nearly two thousand years, the basic media, the major script variation, and the standards of excellence of the art have remained almost unchanged” (Lai, 1982, p. ix). Because of this trait, calligraphy is a unique Chinese cultural carrier which can help us access the core of Chinese culture easier. The soul of the nation has been embodied in manuscript, because it has been miraculously preserved after the vicissitudes of the succeeding dynasties. Calligraphy as an art served a double purpose: both as an instrument leading to the mastering of the culture and also as a medium through which the three high virtues, namely, truth, goodness, and beauty may be attained (Zhang Q. , 1975). “On the practical level, the application of calligraphy in the life of Chinese is broad and diverse” (Lai, 1982). Thus, choosing Chinese calligraphy culture as study object is reasonable.

The Chinese calligraphy on the manuscript carries multi-aspects of the Chinese national soul which includes: the meaning of Chinese characters, the art form, the corresponding historical period, the representative calligrapher’s personalities, etc. Moreover, Chinese character itself is also the Chinese unique culture symbol.

The meaning of Chinese characters delivered Chinese cultural spirit directly. The shape and the structure of the character, the shape of the stroke and the layout of the entire manuscript conveys the mood while the calligrapher was writing, “The hand must correspond to the inspiration given to the heart”, speaks for the essence of the *Doctrine of the Golden Mean* (Zhang Q. , 1975, p. 309). “A man's calligraphy style inevitably reflects his personality and anecdotes from the live.” (Lai, 1982, p. xi). A piece of manuscript suggests the noble character and outstanding personality of the calligrapher which can also interpret the Chinese cultural philosophy. “Yan Chen-Ch'ing of the T'ang Dynasty provides us with a shining example. Yan has been honored by historians and remembered by succeeding generation as a great man with a noble heart of the highest order and also as one of the greatest calligraphists in the history of Chinese art” (Zhang Q. , 1975, p. 305). In addition to the meaning of the Chinese, the characters can be regarded as patterns, and Chinese calligraphy works can be regarded as paintings. “The pure abstract vision of calligraphy is also clearly reflected in the expression of subjunctive mood and implies through abbreviated imagine in painting” (Lai, 1982, p. ix). Meanwhile, the beautiful calligraphy also matches the paper. The paper for calligraphy “can have a variety of texture and

finishes and is commonly made from the mulberry bark, hemp fiber, or bamboo pulp. It can be made in a number of off-white shades and is sometimes imprinted with designs, decorated with gold speckles, or mellowed through aging" (Lai, 1982, p. xii). "Perhaps more than any other visual art, calligraphy can best reveal the Chinese mind and represent it's aesthetic ideal" (Lai, 1982, p. ix).

To sum up, Chinese calligraphy culture includes:

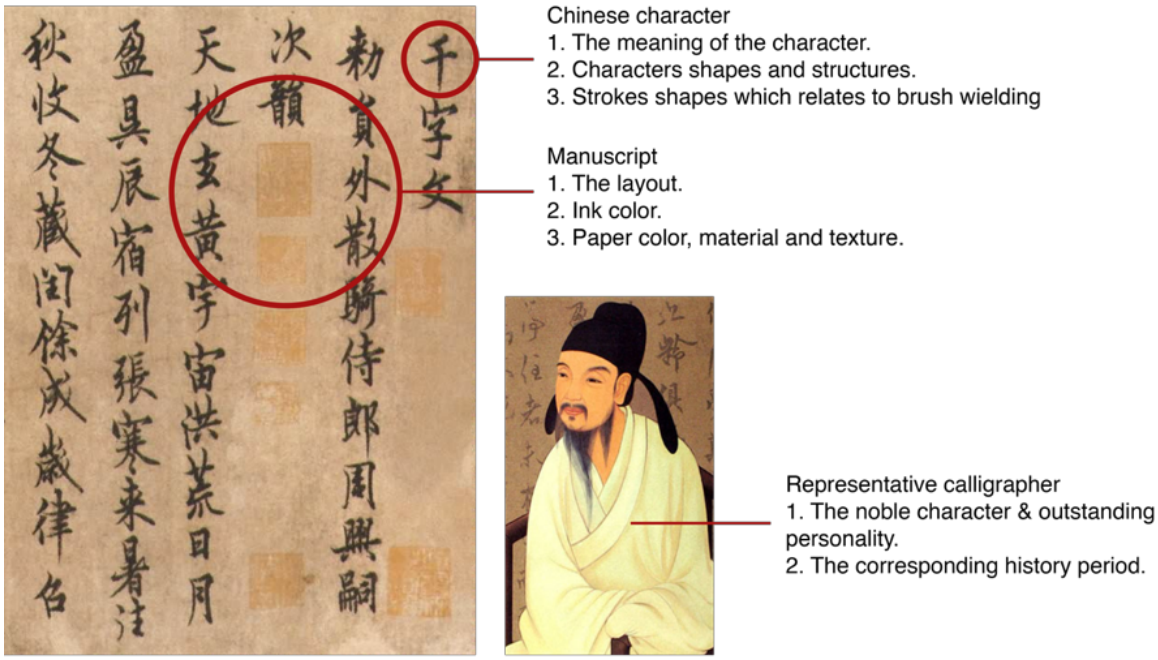

Ouyang Xun's manuscript: Qian Zi Wen (running script).

Figure 3 Contents of calligraphy culture.

In order to study Chinese calligraphy culture in an orderly manner, it is effective to make division according to fonts. The research can be launched around an outstanding manuscript from a representative calligrapher of the certain fonts.

Culture consists of multi-layers. Dahl (2004) advocates two layers: visible and invisible. Schein (2009) and Lee (2004) suggest three levels: basic assumptions, values and artefacts. Hampden-Turner and Trompenaars (1993) propose four layers: a. Basic assumptions and values. b. Beliefs, attitudes and conventions. c. Systems and institutions. d. Artefacts, products, rituals and behavior. Combining all these viewpoints, culture can be summarized into two big layers: the outer layer and the inner core layer, and these two layers have both the visible part and the invisible part.

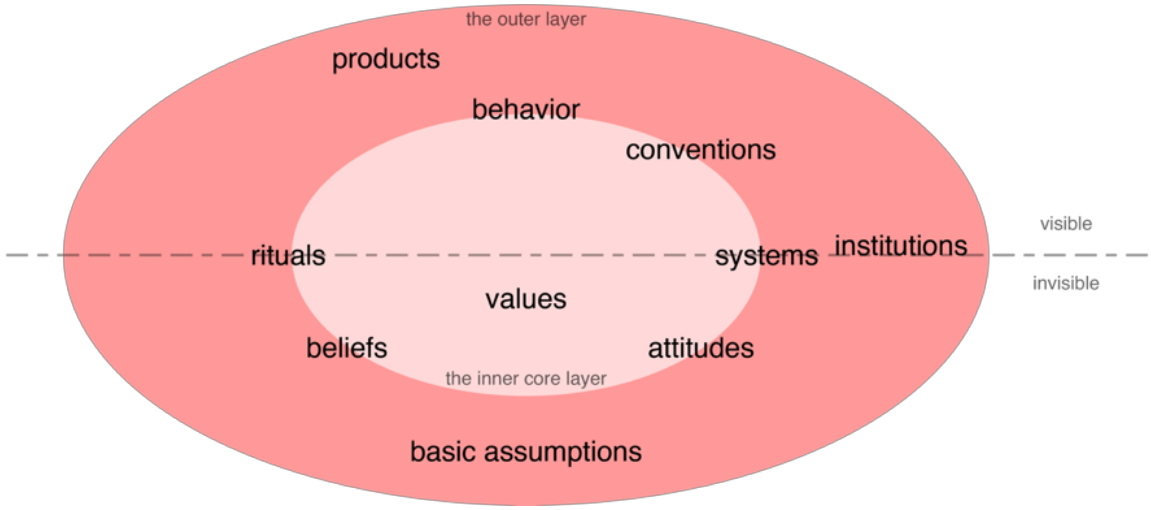

Figure 4 Culture layers.

Usually, the outer layer and visible part are more easily recognized by people who are unfamiliar with a certain culture, so if a designer expects the design to be universally elaborate with the same feelings as that culture, it is more efficient to make the most use of the outer layer and take part of the inner core layer into consideration.

2.2.2 History

Calligraphy, as an important spiritual activity of the Chinese, is deeply rooted in history. To appreciate and learn calligraphy art, you must understand its history. Only by understanding history can we better understand and learn (Ye, A Brief Introduction of Chinese Calligraphy History, 2012). Due to the limitations of archaeological materials, it can only be counted from the earliest existing systemic text: oracle bone pieces. Later, the carrier of calligraphy became more and more abundant. It was cast on bronze, engraved on the stone tablet (stele), written on silk, written on bamboo slips, and written on paper. Ye Peigui (2012) divides the development of calligraphy art into five stages:

The first stage, from the Shang Dynasty to the Qin Dynasty, is called the ancient writing era. In the Shang Dynasty, text is engraved on oracle bone pieces and mainly used for the record of

royal divination, which is known as oracle bone script. The lines of the characters are sharp and straight. The characters are derived from object abstraction and refinement, and their shapes and structures follow formal beauty laws (such as symmetry and uniformity). In Western Zhou Dynasty, text is mainly cast on bronzes and is called bronze inscriptions. The line tends to be full, with apparent thin and thick contrast as well as bend and straight contrast. The pictographic factors in the characters are neatly arranged, reflecting the dignified and solemn atmosphere of the temple, reminiscent of the well-ordered ritual and music culture of the Western Zhou Dynasty. Then Qin Dynasty further integrated and refined the bronze inscriptions and developed it into a uniform and well-structured seal script. The universal use of writing brushes made the "lines" of characters into a more complicated "strokes". Finally, new calligraphy fonts were born, and among which the clerical script was the earliest to mature, and in the process, some form factors of regular script, running script and cursive script appeared slowly. After the Qin Dynasty unified China, the clerical script, which is also called official script, was promoted. From then on, Chinese characters gradually entered a new stage.

The second stage, the Han Dynasty, is the official script era. All kinds of fonts have their own development, but the most outstanding achievement is the official script, and the basic strokes tend to be complete. Beginning in the Han Dynasty, the aristocrats and intellectuals became more interested in calligraphy and became more aware of its charm as art (not just a recording tool). So, it is more effective and meaningful to study Chinese calligraphy culture from the official script.

The third stage, from the end of the Han Dynasty to the Tang Dynasty, is the era of regular script, running script and cursive script and the era of establishing the classic calligraphy art spirit. The ban on Stele mad the official script lose its widest range of applications, so all kinds of fonts are rapidly emerging and developing. In the Tang Dynasty, the art of calligraphy was positioned as "the event of immortality," which has received the attention of Chinese society. In this period, the form of regular script was perfected. With the pioneering creation of artistic practice, the theory of calligraphy art, such as the social function, essence principle, formal law, creation principle, critical appreciation and even historical evolution of calligraphy, has also developed greatly. The calligraphy manuscripts of this period exerted the essence of Chinese

classical thought and scholarship and revealed the special laws of calligraphy art, which became the model and theoretical source of later generations.

The fourth stage, from the Song Dynasty to the middle and early Ming Dynasty, was the literati era of calligraphy art. Since the late Tang Dynasty, calligraphy art gradually became a kind of "artful play" of the intellectual class and an art form that expresses the values, life outlook, academic cultivation and temperament of the literati. The theory and practice of calligraphy in this period emphasizes the characteristics of literati and absorbs influences from the fields of philosophy, aesthetics, literature, painting, etc. The cultural concepts condensed in calligraphy are more and more abundant, which greatly enriched its inner core and enhanced the position of calligraphy in Chinese culture.

The fifth stage, from the late Ming Dynasty to the Qing Dynasty, is the era of ancient calligraphy art apex and the era of transformation. In the Ming Dynasty, the emancipation of thought made the traditional running script and cursive script become freer, the brush-wielding smoother, so the form has a strong visual impact. Calligraphy combines various Zen thoughts, which influenced the rhythm of the layout and the ink shading. In the Qing Dynasty, on the one

hand, calligraphy art was closer to ordinary people; on the other hand, classical calligraphy was comprehensively summarized and sorted out. In the late Qing Dynasty, some calligraphers realized that between the stele and the manuscript, combine [to] make both beautiful, otherwise, both will hurt, and they should learn from each other's strengths and complement each other. Thus, calligraphers worked hard to combine their beauty and create a brand-new path for development. A summary of this discussion is provided in Figures 5 and 6.

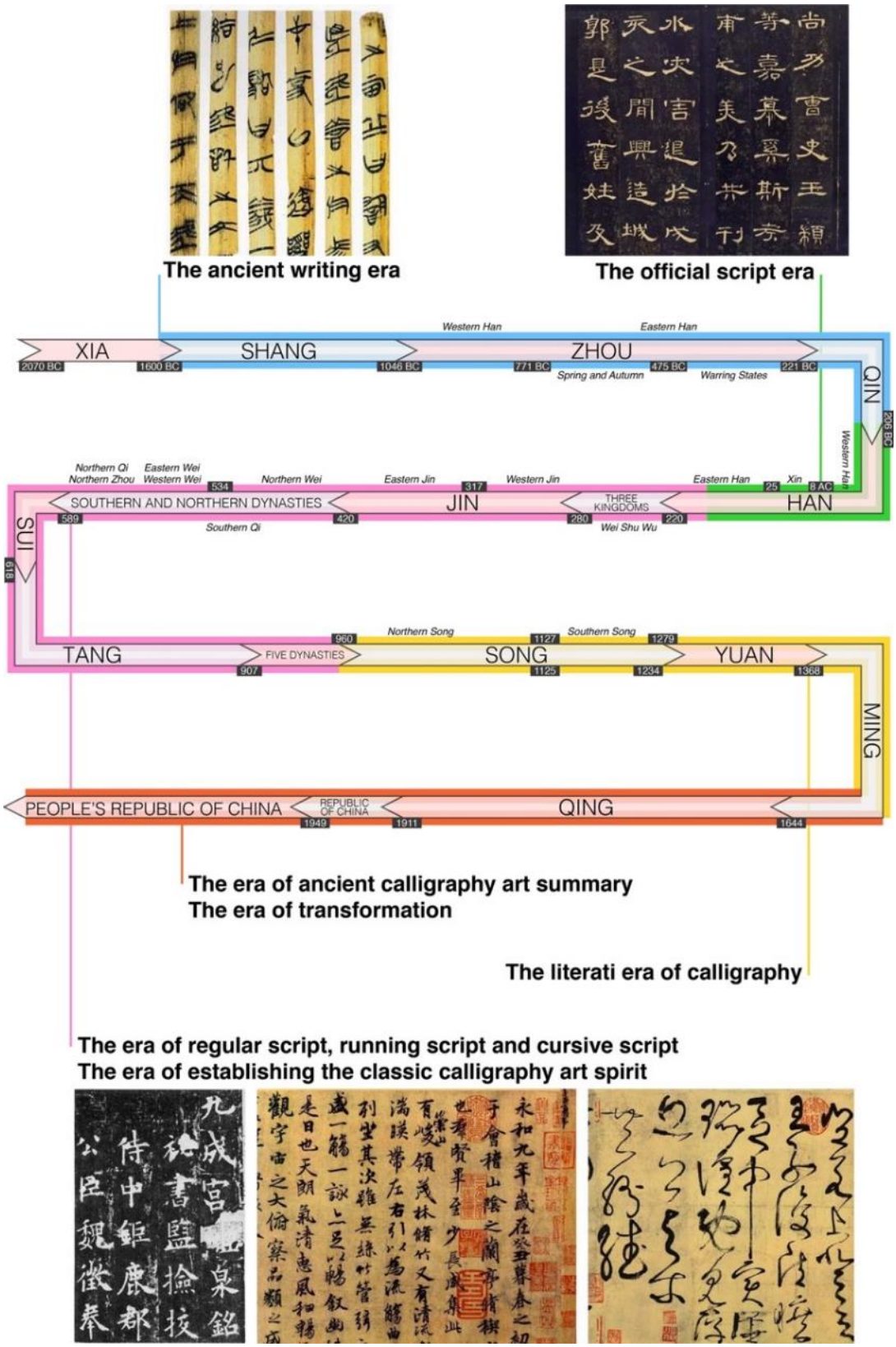

Figure 5 Chinese calligraphy culture history.

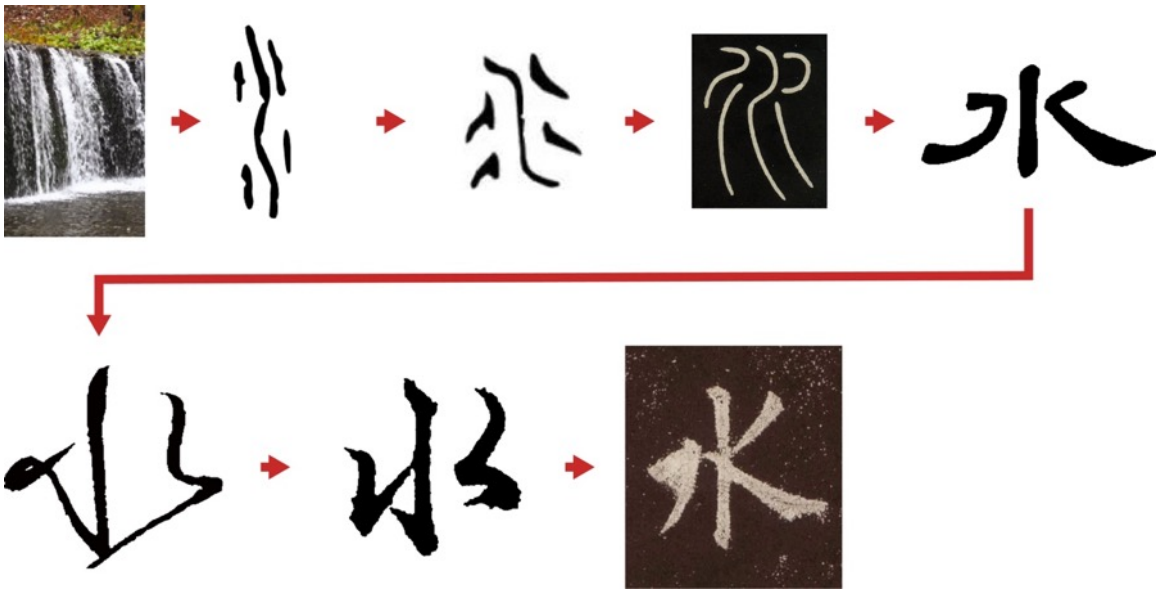

Figure 6 The font evolution example of the character: “Shui” (which means water).

While the official script developed in the Han Dynasty, the calligraphy art of regular script, running script, and cursive script began to sprout. Because the form of the cursive script has the least restriction and the regular script has the most rigorous writing rules, in the Wei Dynasty there already were many calligraphy masterpieces in cursive script. Then, the running script formed a perfect writing norm in the Jin Dynasty. Finally, the regular script fully matured in the Tang Dynasty (Qiu, 2000). However, when studying the relationship between various calligraphy fonts, the analysis usually does not follow the historical development order. According to the changing rules of strokes and glyph structures, the general learning order is official script, regular script, running script, cursive script.

2.2.3 Typical Fonts Introduction

Drawing from the study of Chinese calligraphy culture history, this thesis will focus on the four main fonts: official script(隶书), regular script(楷书), running script(行书), and cursive script(草书).

Chinese calligraphy creates tensions by the interplay of related parts inside a compositional framework (William, 1981). This frame can be a single character and can also be a part of a manuscript or the entire calligraphy work. Ye (2012) believes that no matter what type of the font, Chinese calligraphy shares the following philosophy: 1. Generate the complexity by the simplicity. It starts with a simple stroke; the shape of strokes can be changed by brush-wielding; different fonts have different characteristics; the mutual position relationship of each stroke is basically stable, but different glyph structures can be created by the ratio of length to thickness and the order of writing; the layout of characters and shape relationships between characters are infinite. 2. Express motion in static. The calligraphy work is static but can present the movement of the brush, the density relationships of strokes and characters; the blank part of the layout can show the beauty of rhythm, which is similar to music. 3. Vertical and horizontal have their own

principles. Although calligraphy is free and changes to a certain extent, it has its own internal laws and principles. Although each font differs greatly, each has its beauty standards. This basic principle is the law of beauty in nature. 4. Calligraphy corresponds to the depths of the heart. Brush wielding follows mind and shows the shape of the heart. Therefore, excellent calligraphy works can reflect the good quality of calligraphers, and when a calligrapher creates a calligraphy manuscript in a certain font, he or she can have his own artistic styles without breaking the basic rules of this font. Based on the above information, this introduction and analysis will focus on the character shape, structure, and stroke.

Before introducing the typical fonts, the following displays the names of basic strokes:

Strokes	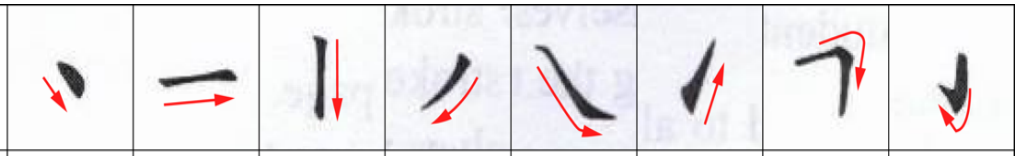							
Chinese pronunciation of strokes	dian	heng	shu	pie	na	ti	zhe	gou
Note	dot *Tiny dash.*	horizontal *Rightward stroke.*	vertical *Downward stroke.*	left-falling *Falling leftward, with slight curve.*	right-falling *Falling rightwards, flattening at the bottom.*	rising *Flick up and rightwards.*	turning *About 90 degree turn.*	hook *Appended to other strokes.*

Figure 7 Basic strokes introduction.

Official Script (Clerical Script):

Mr. He (2015) defined official script as a bridge which connects ancient and regular script, and can be regarded as the start of mature calligraphy. Official script developed and established a complete standard system in the Han Dynasty. Mr. Qiu (2000) devided the official script in Han Dynasty into two parts: the developing one and the mature one. The study will focus on the mature one which is more uniform, rule-driven, standardized and more recognizable.

Official Script has a highly rectilinear structure and its shape tends to be square to wide, and often has a pronounced, wavelike flaring of isolated major strokes, especially a dominant rightward or downward diagonal stroke (Du , 2015). The lower parts of characters are stable and strong.

Zhuang (2009) introduced several of the most outstanding calligraphy works of official script. The calligraphy styles can be divided into four types:

1. The character is in a structure which distributes gravity evenly to both sides. The glyph is square. The strokes are thick and have square corners.

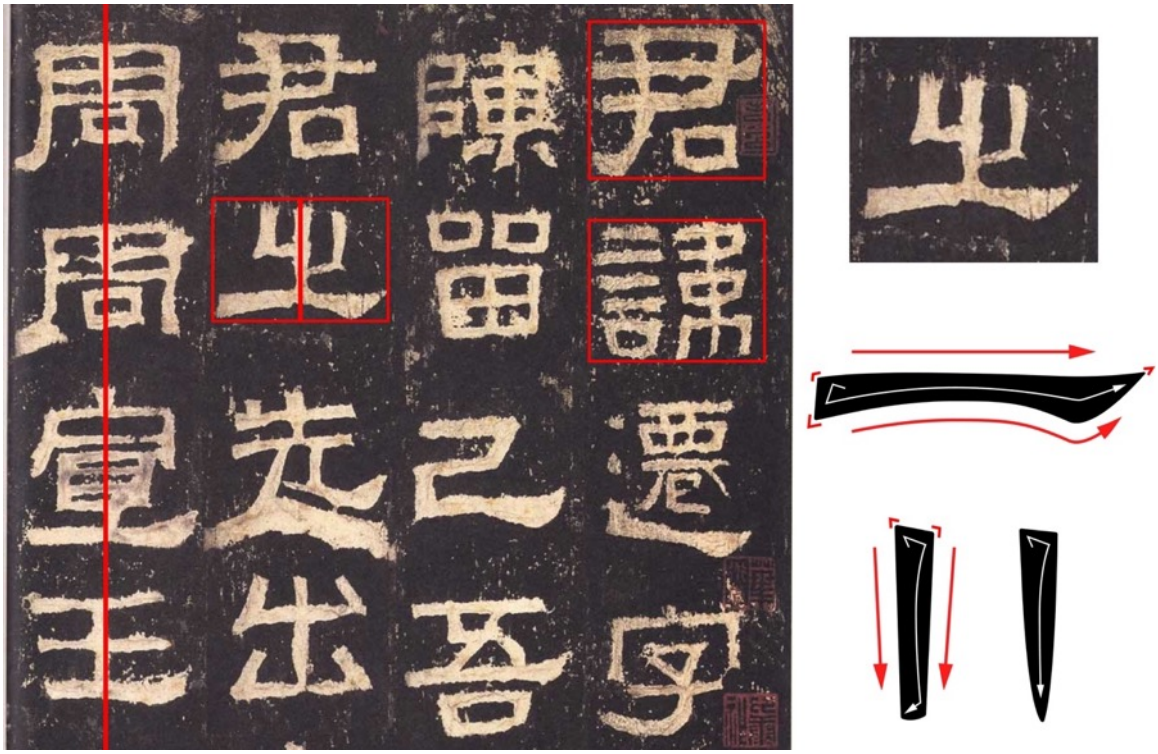

Figure 8 Example: Zhangqian stele(张迁碑) of Han Dynasty.

2. The character structure is balanced and stable. The glyph is square and wider than the above type. The strokes have obvious thickness changes and the edges are rounded. This feature is called the silkworm head and wild goose tail. This font looks flowing, elegant and soft with rigidity.

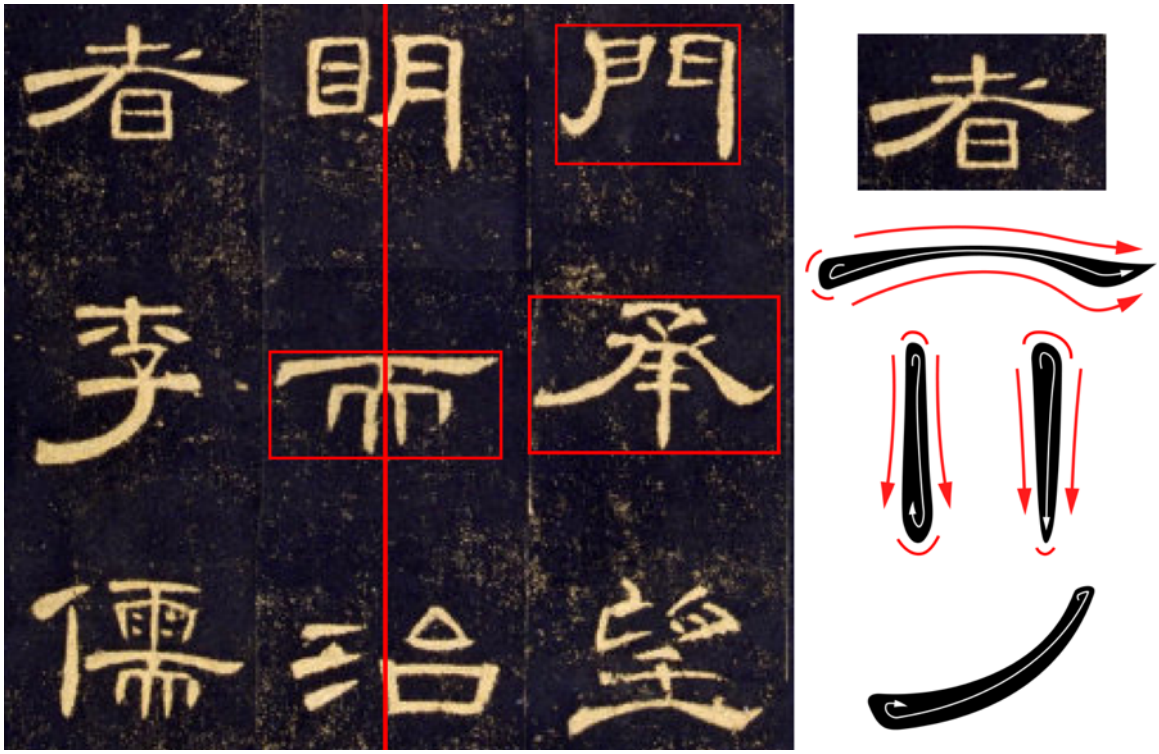

Figure 9 Example: Caoquan stele(曹全碑) of Han Dynasty. (The most perfect and mature work in the same style of official script (Zhuang, 2009).)

3. The character structure is comparatively loose. The shape of the font is slightly flat. The strokes are well-proportioned and variable, whether or not wielding the brush back at the end makes the stroke edge flexible in round or square shape. In this style, the characters are more vivid. Although the stroke "heng"(horizontal) has the feature of silkworm head and wild goose tail, the brush wields a tiny cross at the beginning. Moreover, there is another way to write the stroke ("heng”), which is called hiding head and covering tail.

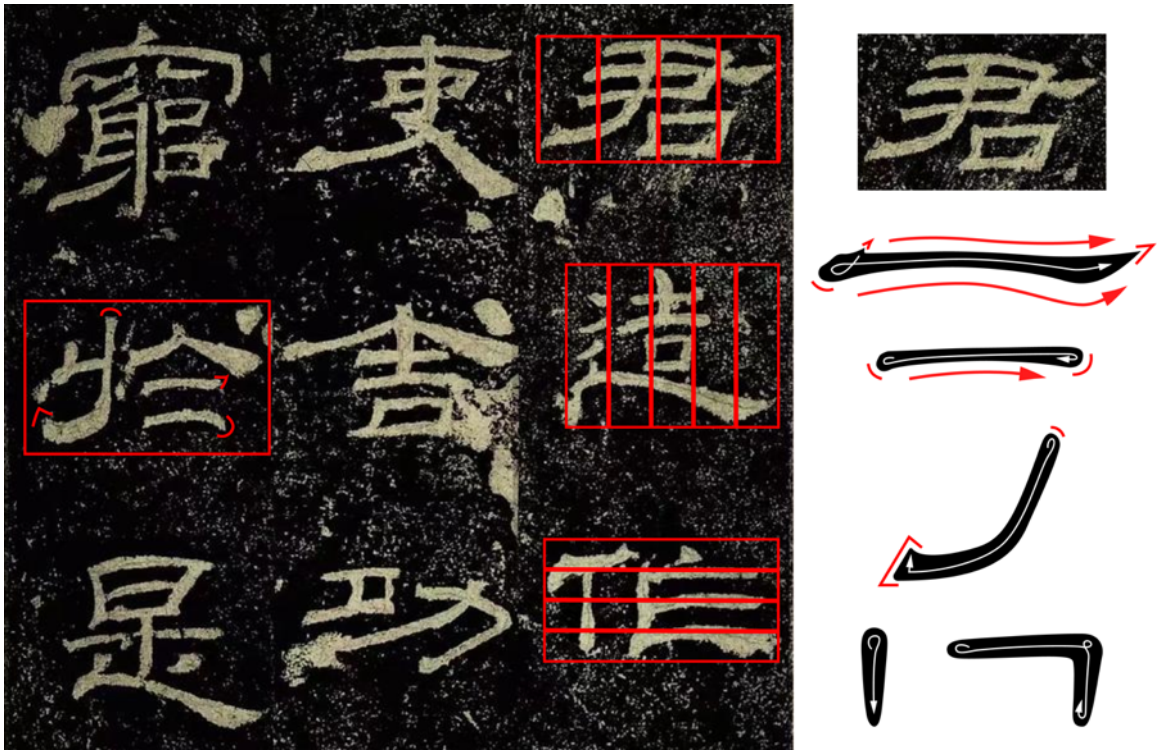

Figure 10 Example: Yiying stele(乙瑛碑) of Han Dynasty.

4. The character structure is indulgent. The strokes are stretch and slender. The form is similar to the Seal Script.

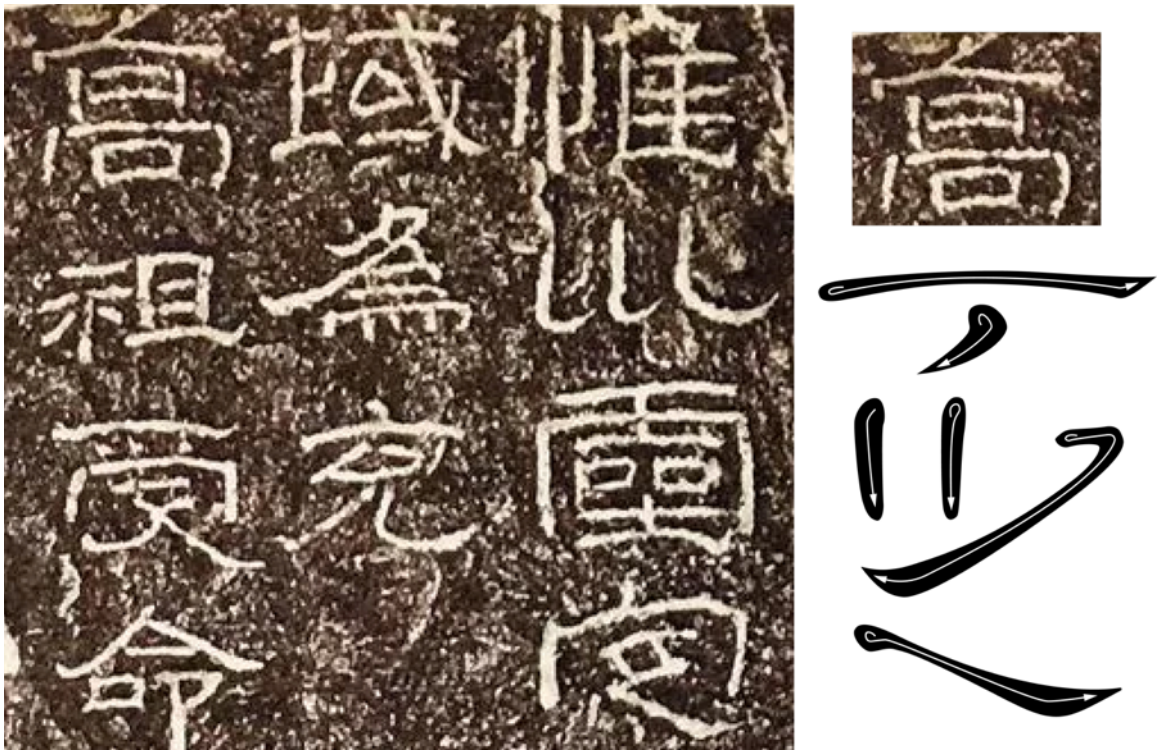

Figure 11 Example: Shimen ode(石门颂) of Han Dynasty.

Regular Script:

The regular script achieved its zenith in the Tang Dynasty. It is a combination of the modified official script; it turned the “silkworm head and wild goose tail” of the official script into a flat and straight form, but it preserved the essential characteristics of squareness and precision (Chiang, 1973). The character shape is tall-to-square with a tight structure and fluid strokes (Du , 2015). As the name suggests, the regular script is "regular", with each of the strokes placed slowly and carefully, the brush lifted from the paper and all the strokes distinct from each

other. Each brushstroke is clearly articulated through a complex series of brush movements. These brushstrokes are integrated into a dynamically balanced whole (Bao, Liang, Liu, & Xu, 2012).

Chiang (1973) said there was an inflexible regularity of design, but calligraphers developed individual types of the regular script. Ouyang Xun, Liu Gongquan and Yan zhenqin are well-known calligraphers and their regular script is regarded as the top in the Chinese history. The following are the introduction and analysis of their representative manuscripts:

1. Ouyang Xun is called the most famous representative of the regular script in the Tang Dynasty. The regular script of Ouyang Xun is characterized by its special construction, precipitous, vigorous and elegant strokes, and its square shape as well as its inner compactness and outer looseness. Its strokes or structure has s very serious pattern (Wei, 2013). “Each character is strongly constructed and designed, and the strokes are sharp and powerful” (Chiang, 1973).

His calligraphy shows great harmony and balance. The shape is square, but the strokes are round and smooth. The stroke “shu” has a slight curve. The stroke "heng" is not completely

horizontal, but slightly inclined to the upper right which still makes the whole structure stable. He writes cautiously and rigorously, and has no excessive performance but proper thickness contrast (not only between strokes in a character but also between characters). His calligraphy is regarded as "extraordinary".

Figure 12 Example: Chu Ch’eng Kung stele(九成宫醴泉铭) of Tang Dynasty.

2. Under the premise that the shape and appearance conform to the basic laws of regular script, Liu Gongquan’s regular script has an outward tension, and the character inner structure is

comparatively looser. Compared with Ouyang Xun, Liu's strokes have greater "boniness" and the construction of the character is more enlarged (Chiang, 1973). Liu's calligraphy is lean.

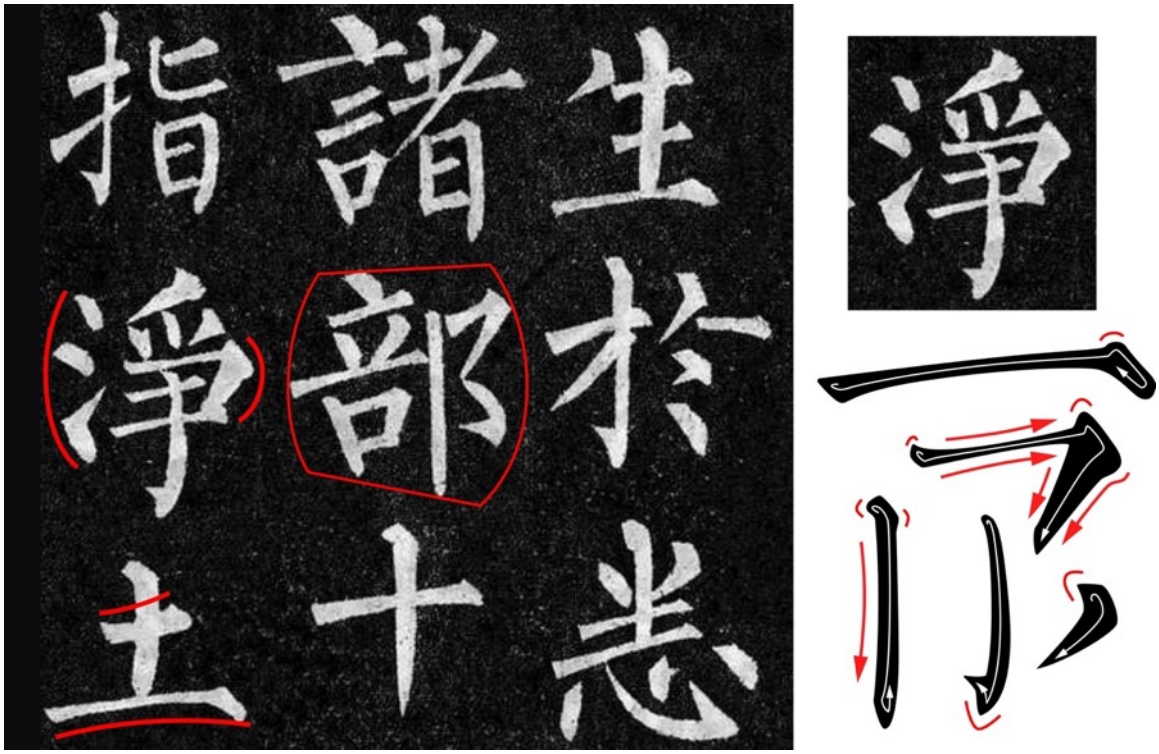

Figure 13 Example: Hsuan Pi pagoda stele(玄秘塔碑) of Tang Dynasty.

3. Yan Zhenqing's calligraphy looks more powerful. The chief characteristic is the heavy structure with the "flesh" of the strokes tightly bound on to the "bones". One can feel the artist

pouring the whole body into his writing (Chiang, 1973). Yan's calligraphy is strong.

Figure 14 Example: Duobao pagoda stele(多宝塔碑) of Tang Dynasty.

Running Script:

The running script is a parallel style together with the other two main fonts. The strokes and patterns of the running script are designed and executed every bit as carefully as those of regular script, only they are written in a quicker way. The strokes and dots, which in the regular script are separate, are usually joined in running script. because it was created because the angles of the official script are softened, and a great deal of movement and ease added.

Although the running script was not derived from the regular script, these two became inseparable; every type of regular script came to have a corresponding type of running script. Running hand, as its name suggests, allows freer handling and more vivid movement. The running script has a fluidity not possessed by the regular script (Chiang, 1973). It is even more worthwhile to compare them with the examples of cursive script later on.

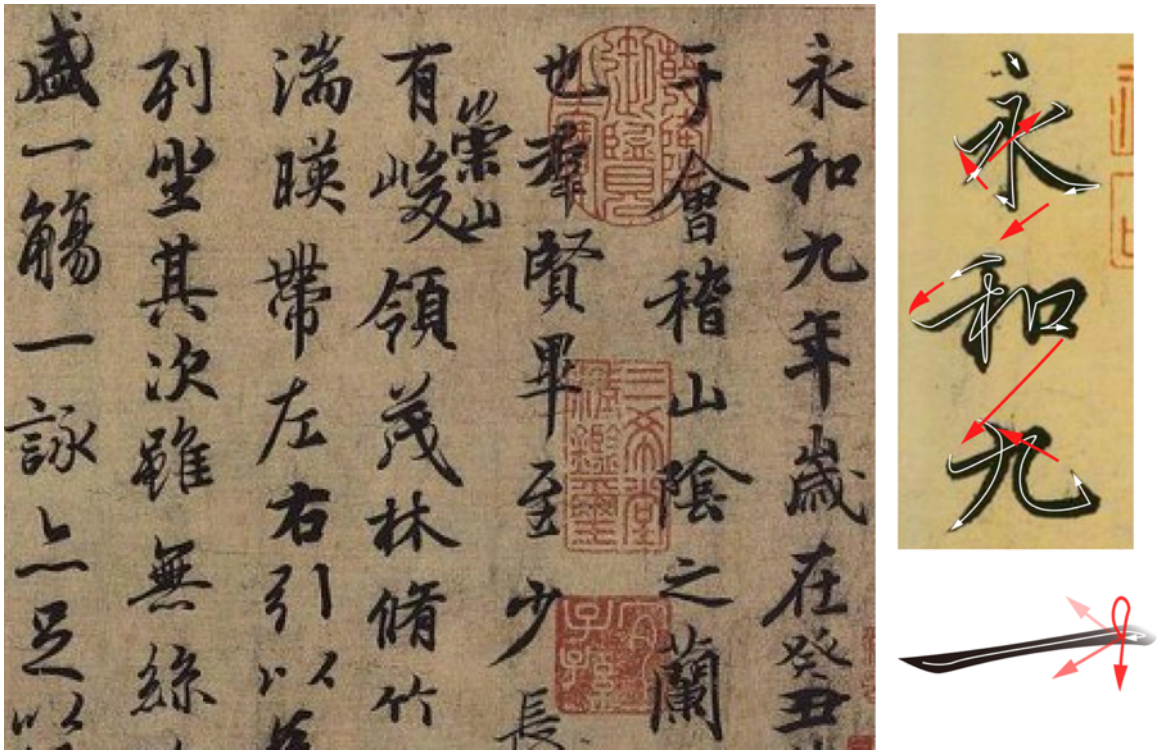

Figure 15 Example: Lanting preface(兰亭序) by Wang Xizhi of Jin Dynasty. The copy was made in Tang Dynasty.

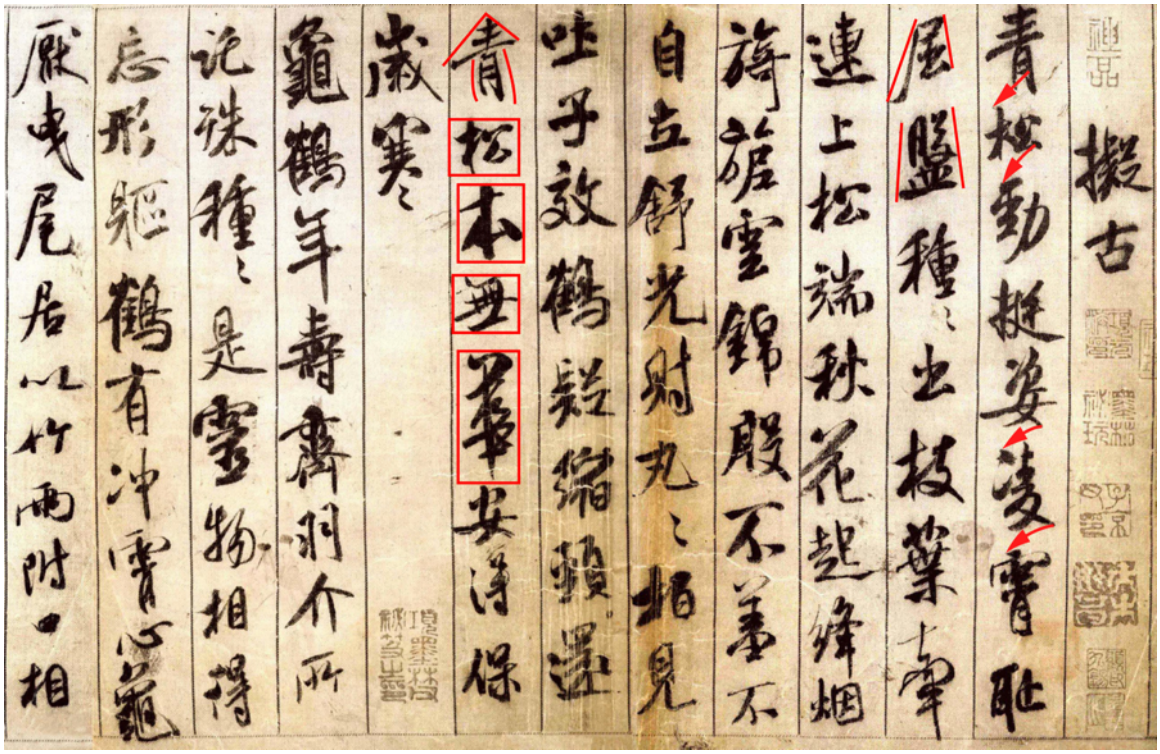

Figure 16 Example: Shusu note(蜀素帖) by Mi Fu of Song Dynasty.

Cursive Script:

The elements of the characters were fixed in the Han period and no changes have since been made in their formation (Chiang, 1973). Thus, although the cursive script is very abstract, it still obeys the basic rules of Chinese calligraphy. After calligraphers established the cursive script writing style in the Wei period of Han Dynasty, all the attention of subsequent calligraphers having been turned to the shaping of the strokes, so that later calligraphy works are more diverse in stroke style.

The undulating strokes of the cursive script were derived from the official script. Every character in a complete piece has to have both an inherent and a visible link with the rest, which creates a flowing structure and organic shapes.

The uncurbed force and rapidity while writing makes this style free and emotional. Due to these characteristics, cursive script is a decorative style and is used on important occasions for the sake of its beauty and dignity. To a certain extent, it can be said that the visual form of calligraphy expresses more emotion and conveys more information than the text itself (Chiang, 1973).

Because of the sketchy manner, the cursive script gives people who are not familiar with Chinese calligraphy art an impression of the rough draft. It requires a high professional quality to appreciate the beauty of the cursive script. Just like a professional painter, the calligrapher needs to master the various principles of painting first, and then carry out abstract painting, such as Picasso for example. The calligrapher requires professionality of understanding character structures and strokes to be able to create calligraphy in cursive script. In other words, the cursive script is a non-universal art.

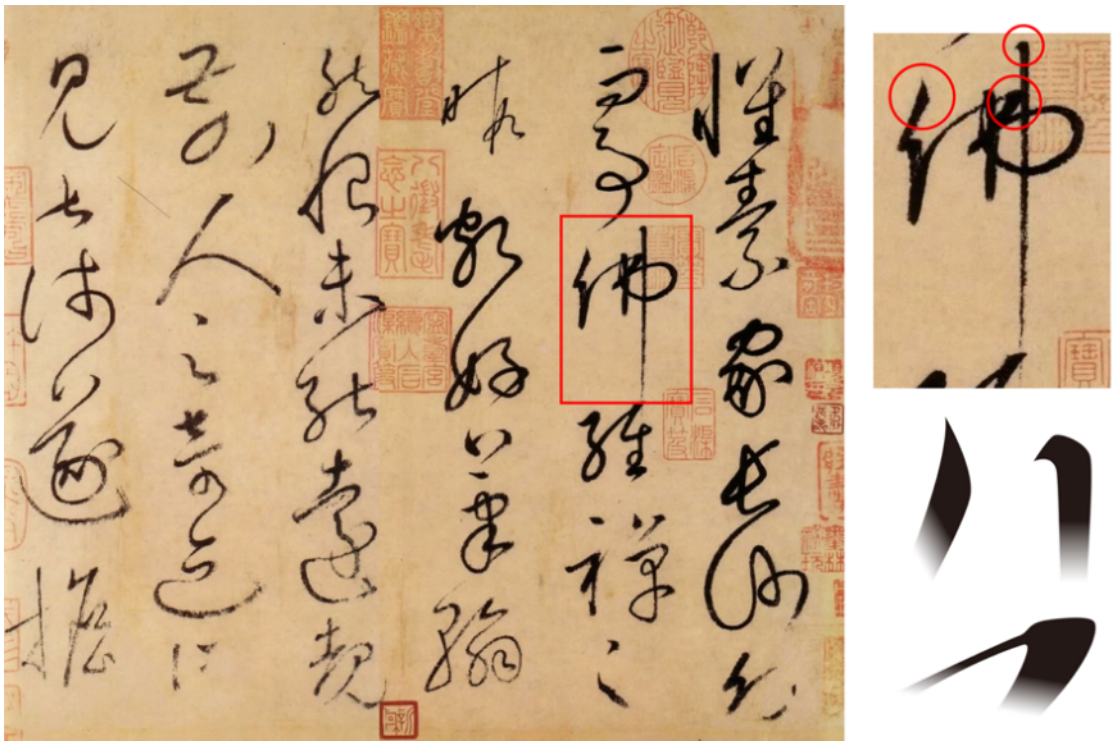

Figure 17 Example: Zixu note(自叙帖) by Huai Su of Tang Dynasty.

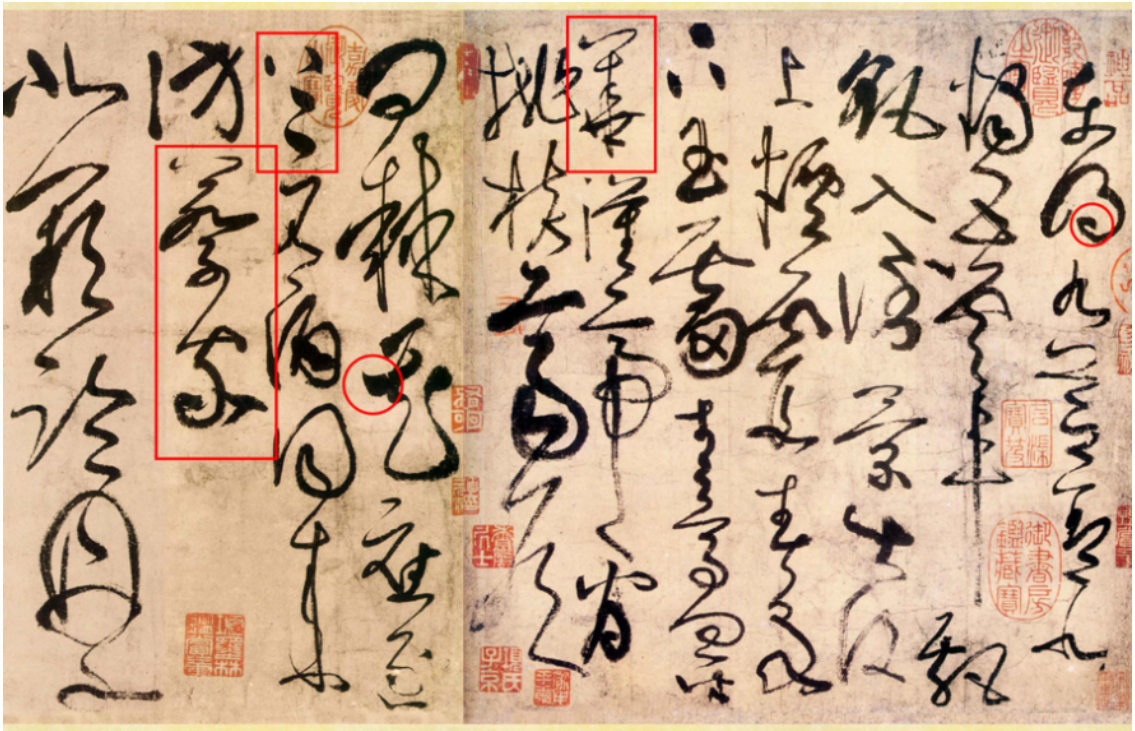

Figure 18 Example: Four ancient poems (古诗四帖) by Zhang Xu Su of Tang Dynasty.

2.3 Stylization

2.4.1 Definition of Terms

Stylize the Culture and Culturalize the Style.

According to the Online Oxford English dictionary, “Stylize” means: “To conform (an artistic representation) to the rules of a conventional style; to conventionalize.” (Oxford English Dictionaries, 1989). “Culturalize” means: “To cause to adapt to or become a part of a particular cultural environment” (Oxford English Dictionaries, 2008). From this we can understand these two phrases: “Stylize the Culture” is based on a cultural feature, using a visual language to describe the abstract culture, and because of some specific visual features, the look and feel of the experience are in line with the external expression and spiritual connotation of the culture. The specific visual features used here are produced by stylizing the corresponding culture and the rules of a culture-based style. While the designer is designing the product, the rules are completely or partially adopted, so that the products have all or part of the same visual characteristics, and the user can directly associate with a certain culture or feel the connection with a certain culture. This design process is thus called the “Culturalize the Style”.

The national pavilions in Expo 2010 Shanghai China are very good examples. The theme of the exposition was "Better City – Better Life". Therefore, when designing pavilions, designers need to reflect cultural characteristics while presenting the modern urban style. This requires designers to find representative cultural intentions, explore its significance in modern society and commonality with modern culture, and then apply to the design (Zhang F. , 2010).

2.4.2 Case Study: How to Define Design Styles

Eric Campbell Fernie (1995) said, “style is a “distinctive manner which permits the grouping of works into related categories” (p. 361). It has “long been the art historian’s principal mode of classing works of art” (Kubler , 1967, p. 853). Thus, studying the basic elements of a design is the basis for analyzing its style. Maitland E. Graves (1951) defined the elements: line, direction, shape, size, texture, value, and color are the materials from which all designs are built. In addition, there are principles that describe the ways that designers use the elements in design: balance, emphasis, movement, pattern, repetition, proportion, rhythm, variety, unity (Understanding Formal Analysis, 2011). A certain style should have several elements and principles with typical characteristics. Because “stylized art reduces visual perception to

constructs of pattern in line, surface elaboration and flattened space (Clark, 2006), these characteristics should be highly summarized and simplified. The figure below is designed based on the study and summarization by Maitland Graves (1951) in the book *The Art of Color and Design*.

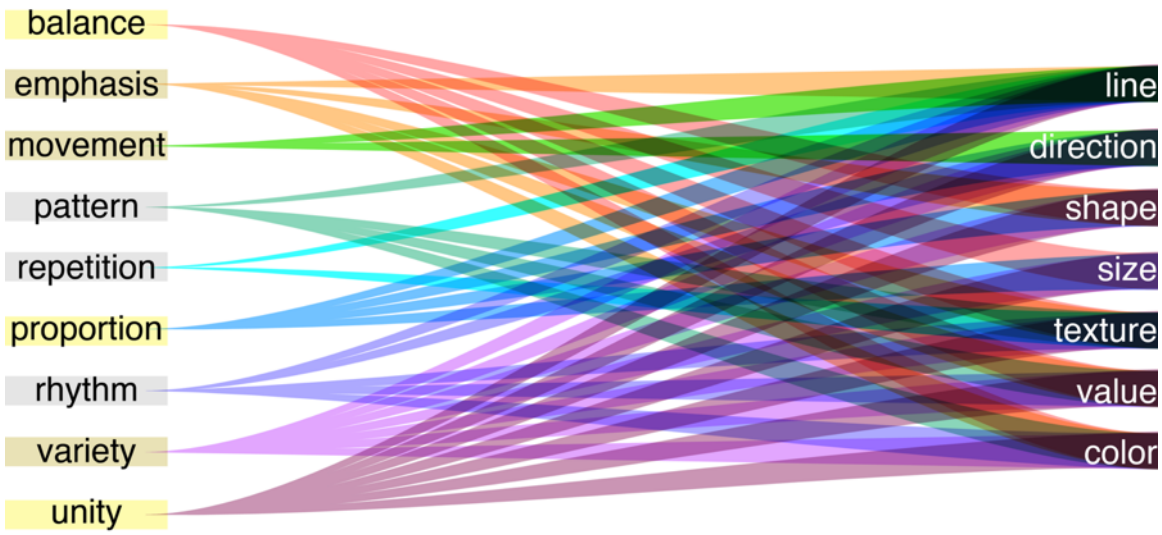

Figure 19 Basic elements and principles of style formation.

The following are examples of culturally distinctive styles.

2.3.2.1 Memphis Style

As the architect, Luigi Caccia Dominioni claims: "We have more imagination, more culture, and are better mediators between the past and the future" (Northern Italy, 2004). Italy is considered a cultural superpower (Gosset, 2013). Italian art has influenced several major

movements throughout the centuries, and has an important place in the international art scene. Among the many artistic styles, the Memphis style has a huge influence, which is derived from Italian culture and affects cultural development within and beyond Italy (Manning, 2016).

Italian furniture design history started from the influences of ancient Greek and Roman cultures, in which designers were seeking a balance between human and science for furniture design. Then, the experiment of combining classical elegance and modern creativity made designers start thinking about ornamentation. Finally, inspired by movements as Art Deco and Pop Art, Italian designers developed the Memphis design style (Northern Italy, 2004).

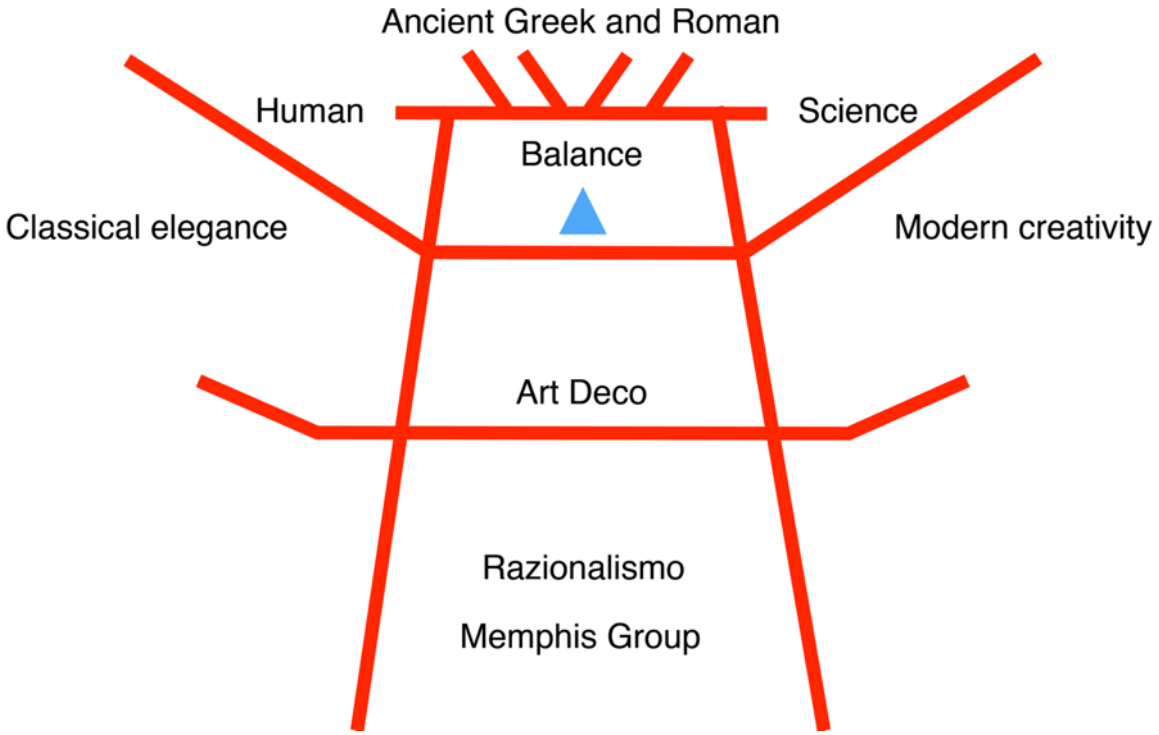

Figure 20 Memphis style development process.

Figure 21 A collection of objects by Memphis, via Wikimedia Commons — CC BY-SA 3.0.

Figure 22 Memphis style furniture. (File: http://www.projecthamad.org/27938/living-room-design-in-philippines-best-of-arts-clubhouse-interior-de-designer-furniture-uk-designer-furniture-stores/)

Function over decoration, form over style, Memphis style is located at one side of the extreme. It provocatively embraced ornament, decoration, color, and pattern as a means to both reintroduce social meaning and to reconnect with the past. Thus, it is called 'decorativeness' style, which is without dogma, expressive, and highly individualistic. "Color, pattern, texture and

often zany geometric shapes became trademarks of the Memphis post-modern style" (Watson, 2002, p. 15).

According to the study on Memphis style in Anne Watson‘s (2002) *Mod to Memphis : Design in colour 1960s-80s* and Richard Horn‘s (1985) *Memphis : Objects, furniture, and patterns*, here is the summarized analysis of Memphis style furniture: 1. They use bright, high-intensity, high-saturation color to show emphasis. Barbara Radice (1995) said these are the comic strip color, plastic color, ridiculous color, naive color, and third world color. 2. Combine with a large number of geometric shapes. 3. Structure balances in symmetry and asymmetry. 4. Form in a visually flattening style, using repetition and variety. 5. Combination of different materials. 6. Create a sense of movement and rhythm.

2.3.2.2 Bauhaus Style

Germany is called the land of poets and thinkers (Wasser, 2006). It is clean and orderly; the thinking of "quality counts" gives an insight into the importance placed on quality, which comes back to the long-term outlook of the German culture (Schlerf, 2019). The focus on engineering and quality is a hallmark of German manufacturing companies (YDSTIE, 2018). In terms of

industrial design, German design enjoys a high status in the world and has a high degree of recognition (Heskett, 1986). The Bauhaus style, which is located at the other side of the extreme from Memphis style, later became one of the most influential currents in modern design (Fleming & Honour, 1999). “Bauhaus design has produced many notable contributions to furniture design” (Schenker, 2018, p. 40).

Modernism is a cultural and philosophical movement, with origins from the 1880s. It was along with cultural trends and changes. Then, Deutscher Werkbund was founded in 1907. It was a state-sponsored effort to integrate traditional crafts and industrial mass-production techniques. Under the influence of these foundations, finally Bauhaus was established in 1919 “when the German zeitgeist had turned from emotional Expressionism to the matter-of-fact New Objectivity” (Joseph, 2013) in 1919. The approaches, unify art, craft, and technology, were incorporated into the curriculum of the Bauhaus. It was a pragmatic approach to integrating theory and application and was marked by the absence of ornamentation and by the harmony between the function of an object or a building and its design (Ruedi, 1998).

Figure 23 Barcelona® Chair. (Designed by Ludwig Mies van der Rohe, produced by Knoll®)

Barcelona® Chair (See Figure 23) features two slim rectangular cushions over a light, stainless-steel frame. The chair frame was formed from one seamless piece of metal (Hitti , 2018).

Figure 24 Wassily Chair. (Designed by Marcel Breuer)

Breuer was impressed with the lightness of the tubular steel frame and inspired to create the chair (See Figure 24). He envisioned to simplify the chair structure to only an outline, with a canvas seat, back, and arms. This chair is revolutionary in the use of materials and manufacturing methods and highlights Mannesmann, a German steel manufacturer's advanced technology of producing seamless steel tubing (Trope, 2013).

Figure 25 Nesting Tables. (Designed by Josef Albers)

Albers' principle (See Figure 25) was to instill the idea of deploying available resources economically and prefer handling materials skillfully instead of just working on a beautiful result. "Each table was made from solid oak and lacquered acrylic glass. Known for his colorful, geometric artworks, Albers applied the same style to the tables, giving each a distinctive color of blue, red, yellow and white" (Hitti , 2018)

Bauhaus is known for its distinctive and modern style and practical spirit. Following the principle of simplicity, the furniture was designed to be functional above all other qualities and easy to produce efficiently. The design follows the following characteristics: 1. Stripped down to basic elements and fundamental components to find the most basic line shape, in order to determine the most simplified structure. 2. Function over decoration, form over style, form follows function. 3. Rely on modern industrial techniques, use the more readily available materials, such as steel, glass, plywood, and plastic rather than solid wood (Hitti , 2018).

2.3.2.3 Summarize Effective Factors

Generalize which aspects can be used to define the style, and what practical facts can control the basic forming elements.

According to the case study of Memphis style furniture and Bauhaus style furniture, there are some influential practical facts (See Figure 26) during concept realization. These facts complement the right half of the Figure19: Basic elements and principles of style formation in section 2.3.2.

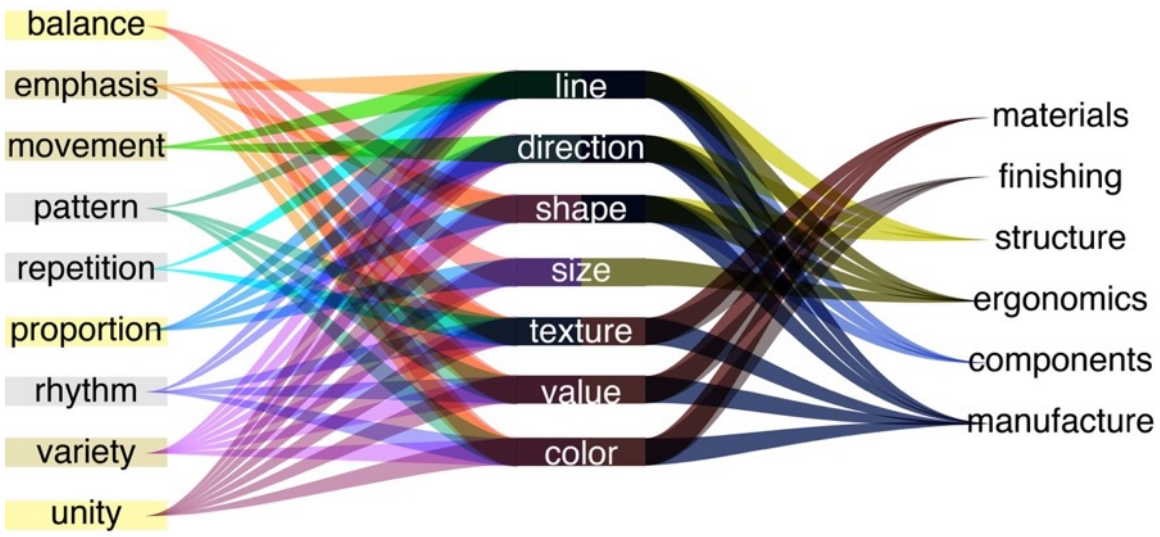

Figure 26 Practical facts.

As the case studies in sections 2.3.2.1 and 2.3.2.2 show, a certain style is defined and formed by a unique combination of elements with protruding features, special principles, and restricted criterions. These elements are controlled by some practical facts: materials, finishing, structure, ergonomics, components, and artifacts. For example: 1. Memphis style furniture: First of all, the size and measurement follow ergonomics. The design uses a combination of different materials, paints, and surface finishing to create a variety of colors, textures, and values. Geometric components and irregular structures determine diverse lines, directions, and shapes. 2. Bauhaus style furniture: Besides the ergonomics part, the very basic components and simplified structure fix the line, direction, and shape. Manufacturing technology influences the realization of design.

2.4 Furniture Design

2.4.1 Furniture and Culture

The reason why furniture can be one of the appropriate objects to apply the design tool that I will create in this thesis.

The amount to which cultural diversity is reflected in differences between products and product forms, depends on the type of products, the situation and cultural habits. Some products where differences, due to cultural diversity, are almost absent is because the very nature of the production process of mass-produced industrial products does not allow for much variation between batches, and consumers throughout the world apparently use these products almost in the same way. It seems that as far as the vast majority of mass-produced industrial products is concerned, the overall uniformity in product design does not seem to be a source of usability problems (De Leur, Drukker, Christiaans, & Rijk, 2006).

In the book *Furniture Design*, James Christopher Postell and Jim Postell (2007) define the concept of furniture: 1. Furniture refers to movable objects intended to support various human

activities. 2. Furniture is also used to hold objects at a convenient height for work or to store things. 3. Furniture can be a product of design and is considered a form of decorative art. It can serve a symbolic or religious purpose and reflect the local culture. It can be made from many materials. 4. Furniture design is deeply rooted in the human condition.

In addition, throughout the history of furniture design, the representative furniture design styles of many important periods are derived from culture (Hinchman, 2009; He, 1991; Jackson, 2019). A summary of this discussion is provided in Figures 27.

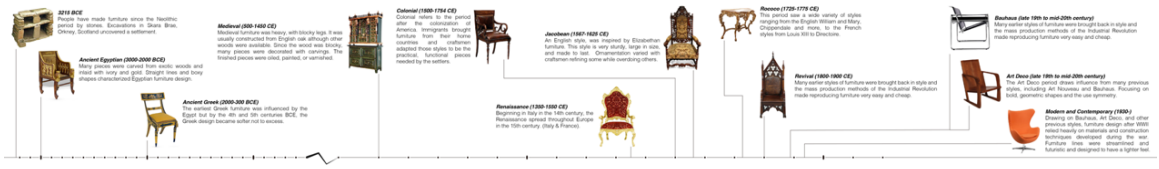

Figure 27 The history of furniture design.

It can be seen that furniture is very suitable as a carrier for the combination of culture and design.

2.4.2 Furniture Manufacturing and Contemporary Life

The demand for furniture in today's life and the development of corresponding production technology.

All modern forms must correspond to new materials and the new requirements of our time if they are to fit modern mankind (Sparke, 2013).

According to Steven Brand's (2017) analysis and forecast, the demand for more cost-effective furniture is growing due to the rising proportion of people who choose to rent in recent years and the continued upward trend of people who choose to rent in the future. At the same time, the increase of single family and the development of online retailing have led to more and more furniture adopting modular structure and can be assembled easily.

Corresponding to the changes in people's needs in modern life, technological development has brought new materials and new manufacturing technologies, which provide more possibilities for furniture forms. For example, the application of industrial hard/soft foam and digitalized molding technology make the shape of the furniture no longer restricted (Tomlinson, 2018).

Figure 28 S chairs by Tom Dixon molded in industrial foam.

In addition, it can be found that many designers and furniture companies have begun to use 3D printing technology to make furniture components or even a whole piece of furniture. “The future of 3D printed furniture goes arm in arm with laser cutting” (Zeijderveld, 2018, p. 8).

Figure 29 Ultimaker's Scandinavian styled 3D printed table by Jon Christie.

Figure 30 IKEA'S knitted armchair.

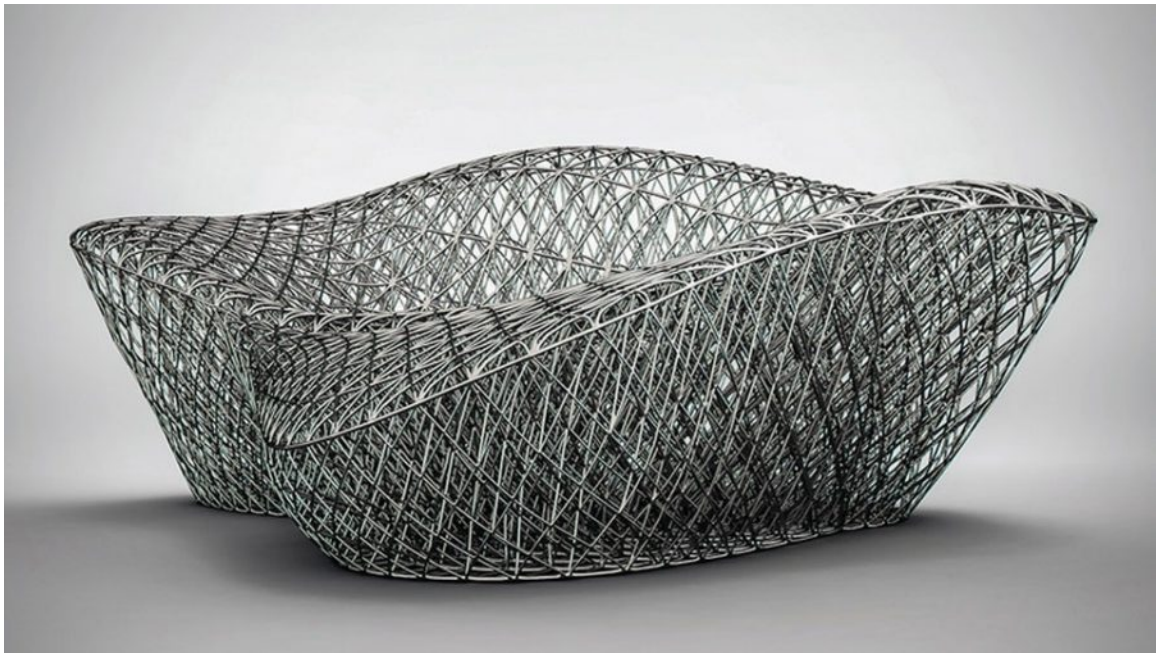

Figure 31 Sofa So Good couch by Janne Kyttanen.

The development and application of new materials and new technologies are also of great significance to the environment and meet the needs of the times (Tomlinson, 2018).

These new materials and new technologies have made the product form unrestricted, further expanding the designer's creative space.

Chapter 3

A Guideline of Applying Chinese Calligraphy Culture to Contemporary Furniture Design

3.1 Overview

This thesis is an experiment of finding a way to create new expressions and new meanings of traditional culture in the new era. When developing design tools, furniture is chosen as a carrier, so the outcome of furniture design, on the one hand, expresses cultural visualization, and on the other hand, meets modern life needs. Cultural style furniture, on the basis of satisfying users' functional requirements for furniture, fulfills the cultural needs of users.

Due to the insight of the demand for furniture in modern life, this study developed a design tool that uses Chinese calligraphy culture as an element to stylize Chinese culture, summarized in the design flow chart, which is explained in this chapter. The flow chart includes the following:

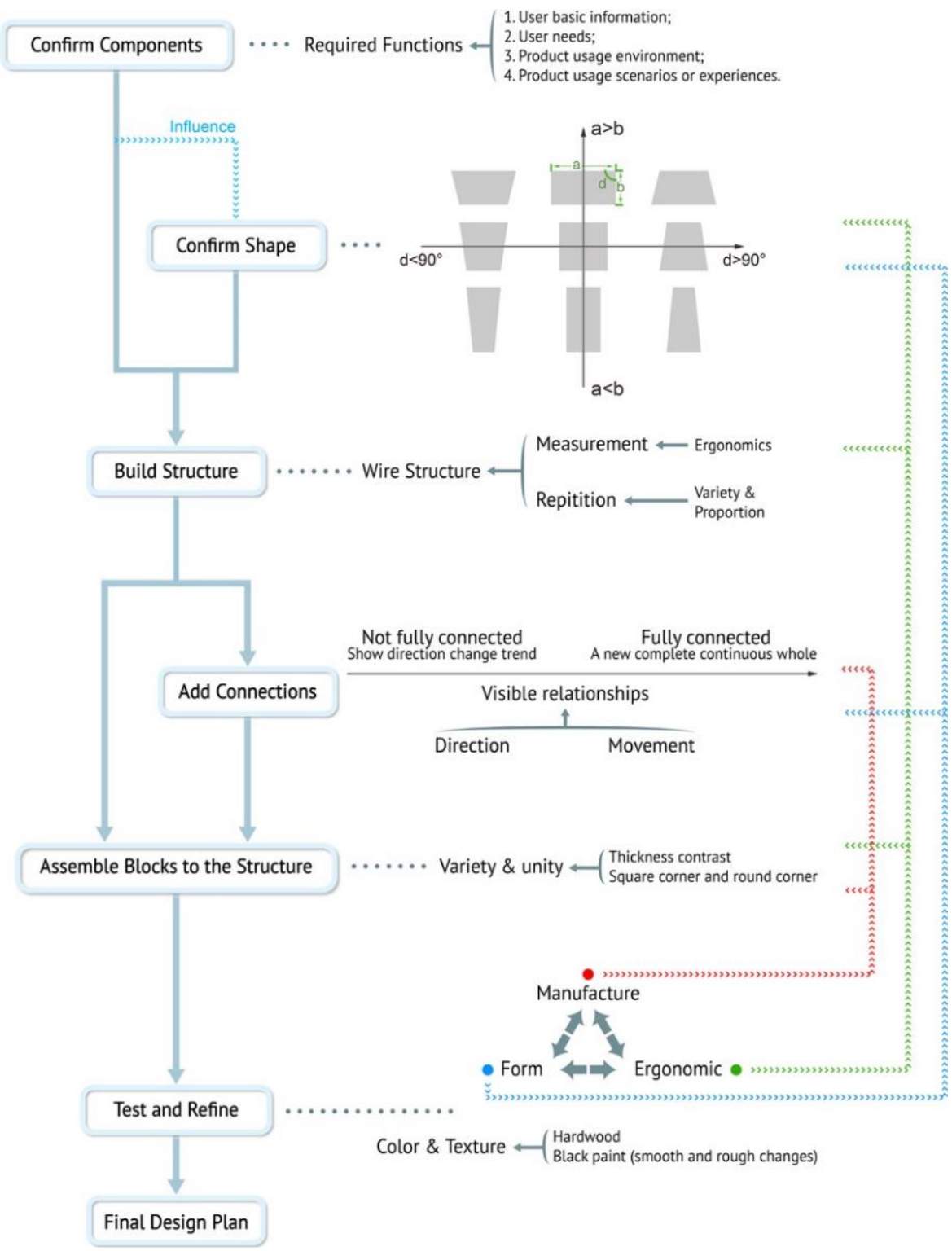

Figure 32 The flow chart of using Chinese calligraphy culture as an element to design Chinese style furniture for contemporary life.

3.2 Confirm Components

In order to confirm components, the required functions need to be identified. According to Li's (2016) viewpoint the "product function can be decided into two categories, the first of which is related to mankind, containing human function, and the second of which relates to machines, containing technical and production functions" (p. 75). In this section, the functions related to mankind need to be identified. With the user as the center, the following aspects need to be analyzed:

1. Basic user information;
2. User needs;
3. Product usage environment;
4. Product usage scenarios or experiences.

3.3 Confirm Shape

"All Chinese characters may be made to fit inside the periphery of an invisible square" (William, 1981, p. 188). Based on the study of Chinese calligraphy culture in chapter 2.2, the following are the selectable shapes for the entire product. These shapes show the overall width, height ratio

and angle range. When selected shapes also need to refer the confirmed components, human-related functions and ergonomics.

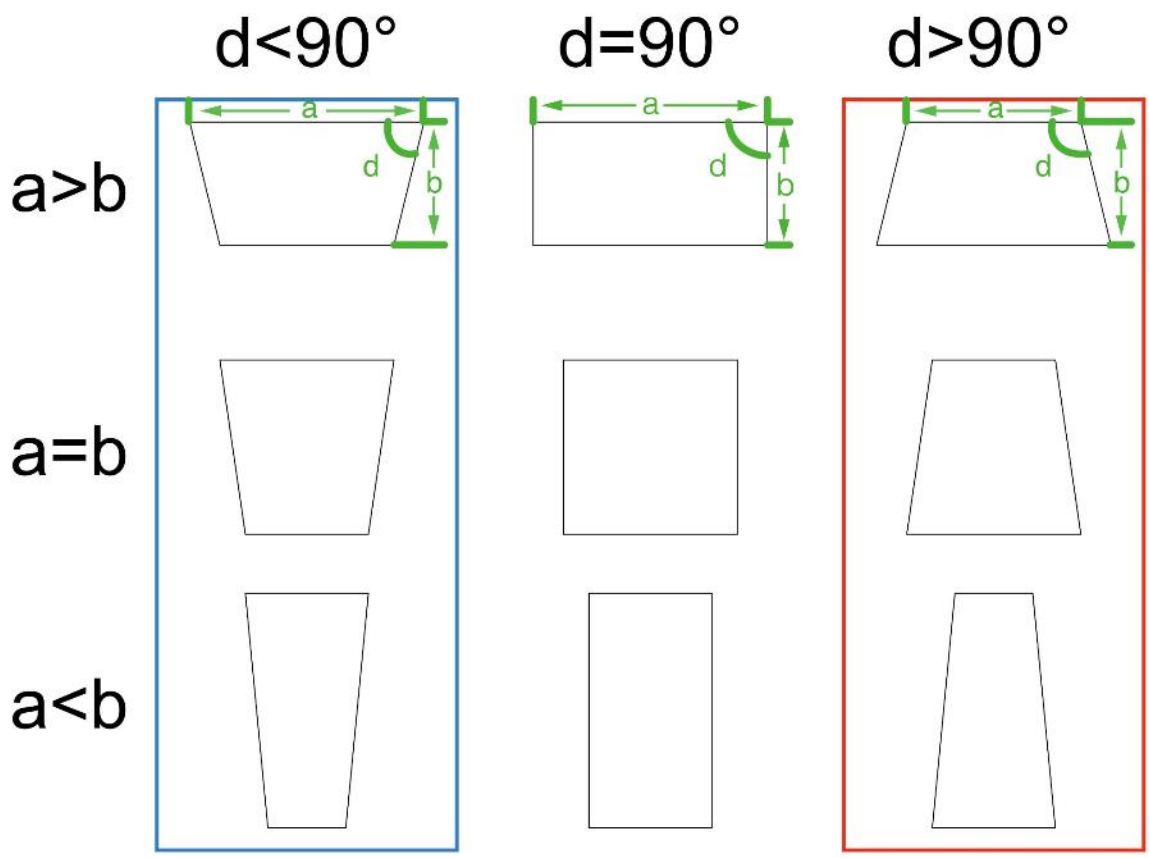

Figure 33 Shapes.

3.4 Build Structure

Put the components together to the confirmed shape and use wire to illustrate structure; meanwhile, the measurement and size should obey the ergonomics.

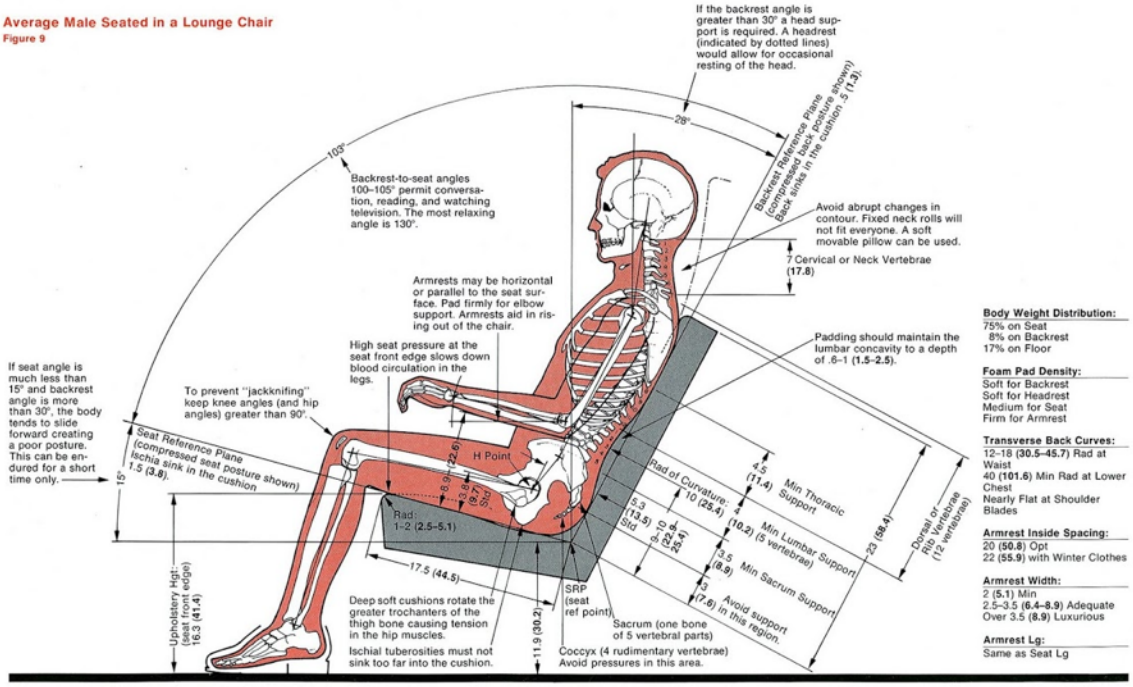

Figure 34 Chair design ergonomics. (jpanichella, 2011)

According to the study of Chinese calligraphy culture in section 2.2, if there is a repetition in part of the structure and the repeated components (more than or equal to 3) are in the same plane, the distance between these components must be the same.

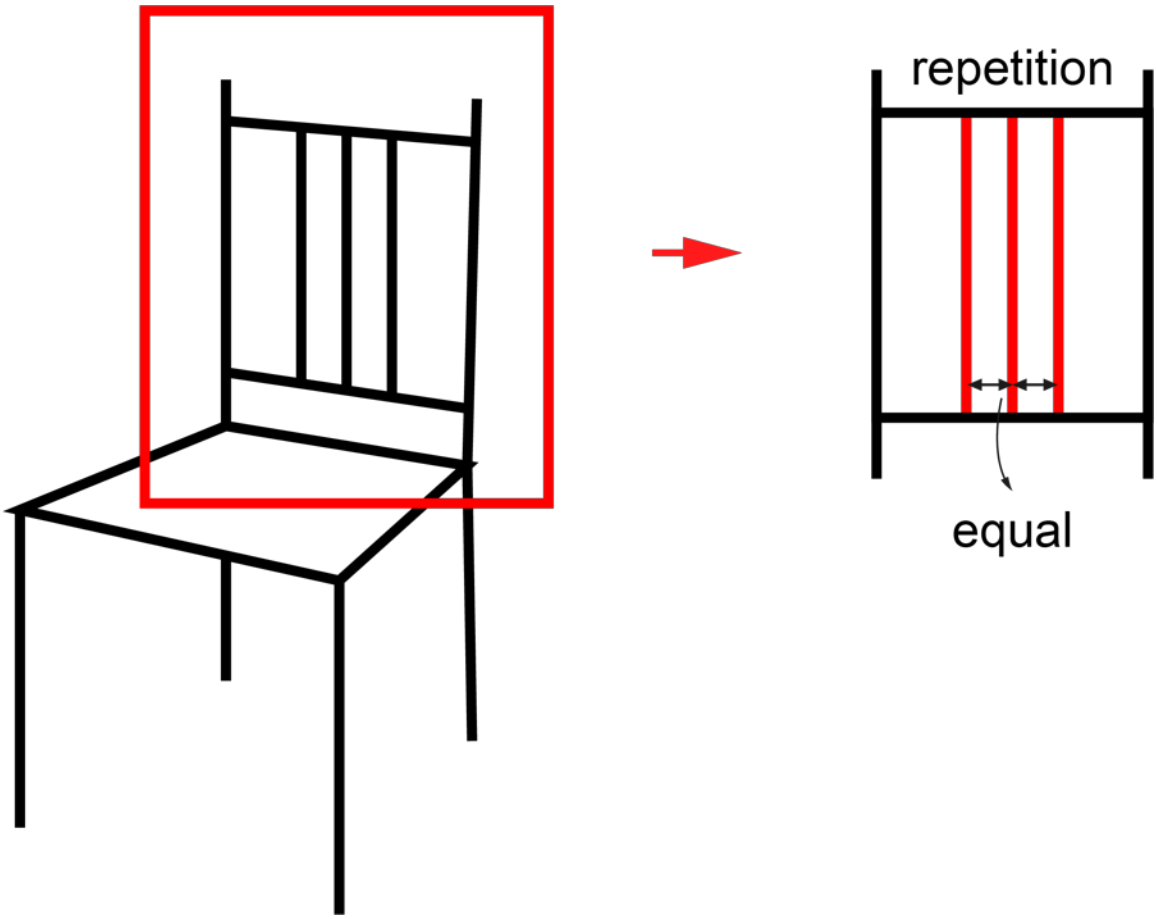

Figure 35 Repetition example.

3.5 Add Connections

This step, “add connections” is optional. The components in the structure can be clearly divided. Otherwise, according to typical fonts introduction in Chapter 2.2.3, there is a conclusion that the most significant feature of running script and cursive script is that strokes have visible connections with each other. Depending on the degree of connection, the law can be summarized as from not fully connected to fully connected. When it is not fully connected, brush movement

tendency while writing or the direction of where next stroke locates can be seen, but each stroke still can be clearly distinguished; when it is fully connected, strokes are completely connected to form a whole, and cannot be distinguished separately.

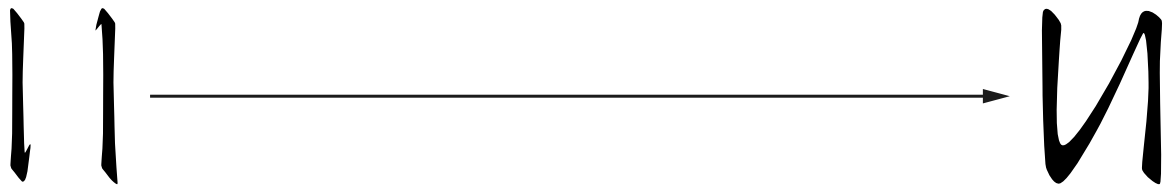

Figure 36 Strokes connection degree.

Converting this law into a structure is the visible connections between components. These connections can show the relationships between each component to create a sense of movement. When the degree of connection of the components reaches the highest level, all the components in the connection form a new complete continuous whole.

3.6 Assemble Blocks to the Structure

Strokes are the very basic units of a calligraphy work. So, the blocks here are transformed from the strokes. Although there are many Chinese calligraphy strokes, learning Chinese calligraphy starts from “horizontal”, because the stroke “heng” contains almost all the writing rules, all other strokes are part of the “heng” or “heng” and change direction:

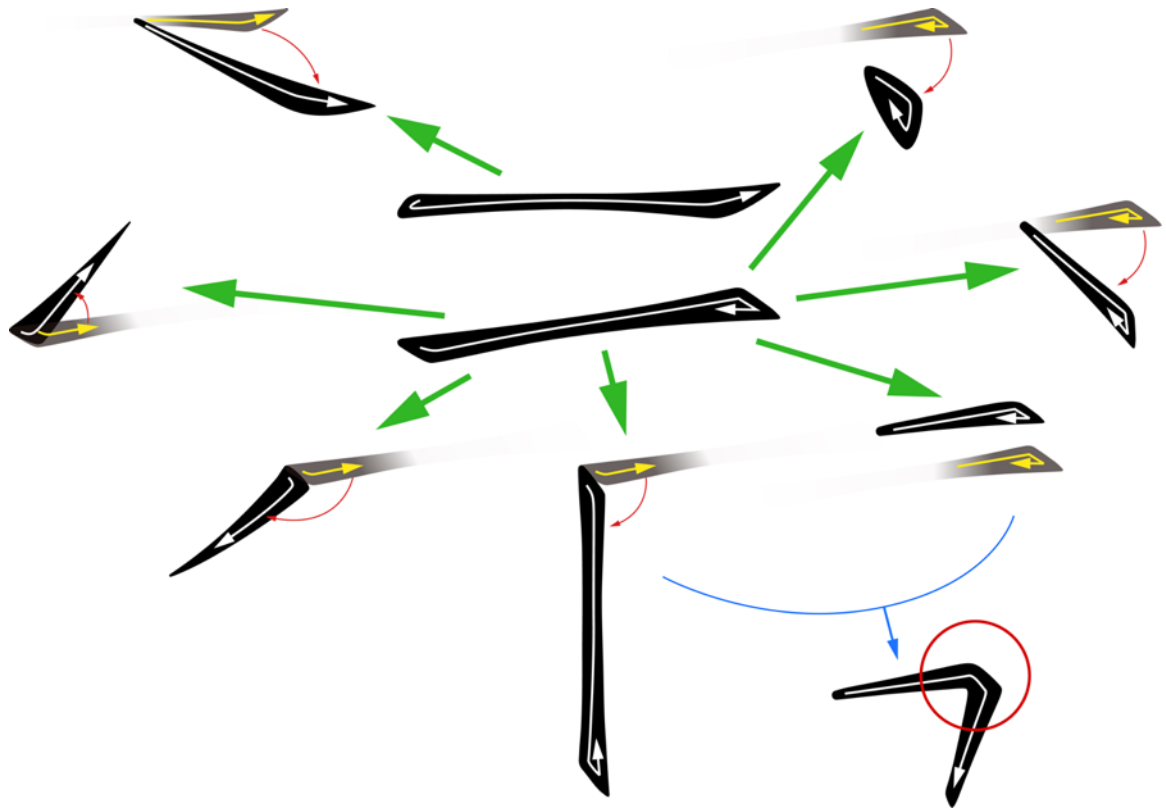

Figure 37 The relationship between "heng" and other strokes.

According to this, as long as the strokes of "heng" are converted into blocks, the other blocks corresponding to other strokes can be derived from the "heng" blocks by intersecting portions or changing directions.

The concept of strokes came out with the establishing of official script, and after the writing standard of official script was developed to maturity, calligraphers transferred their interest to strokes study, and as a result, finally the regular script with well-defined strokes was developed to maturity. This process gradually evolved under the attempts of different calligraphers for

different styles, official script and regular script are two mature fonts which can be regard as two important nodes in this evolution. Because the evolution is not a one-way line, these calligraphy styles as tried are diverse, immature and not representative. These intermediate calligraphy styles that had not been developed into fonts will not be considered. Simplifying the middle process, the strokes evolution is on the t-axis, which starts from the official script to regular script. The study will focus on the strokes of official script and regular script.

In the case of obeying the basic rules of the fonts, these two fonts have many different writing styles created by famous calligraphers; meanwhile, the calligraphy styles of the same calligrapher written in different situations are not exactly the same. Therefore, among so many writing styles of a certain font (official script and regular script), in order to sum up all the strokes of all the styles, it will be more efficient to find out the changing rules and key style nodes of stroke "heng". Then, transforming these key strokes of “heng” to blocks can get the complete strokes transformed blocks collection of official script (or regular script).

Finally, the collection of all the blocks shapes is in a four-dimensional map. First of all, the strokes evolution from the official script to the regular script is on the t-axis.

Figure 38 t-axis.

Expanding the two nodes of official script and regular script, there are two corresponding strokes “heng” transforming blocks collections in a three-dimensional map: 1. blocks collection of official script. 2. blocks collection of regular script.

Blocks collection of official script.

The stroke "heng" of official script has three basic shapes that can be used as key nodes. They are full square corners, square and rounded combined (silkworm head and wild goose tail) and full rounded corners. The stroke "heng" of other calligraphy styles are different in thickness contrasts. The most basic way to transform a stroke into a block is extruding; blocks transformed in this way locates at the x-axis when y-axis is 0 and z-axis is 0.

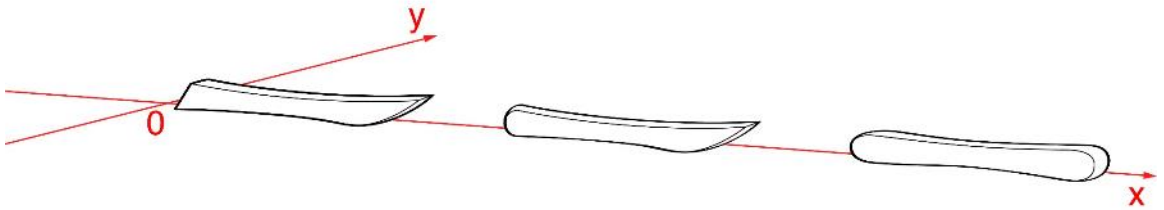

Figure 39 Blocks collection of official script on the x-axis when y-axis is 0 and z-axis is 0.

The positive direction of the y-axis is upward, the contrast of strokes is getting smaller and smaller, the negative direction of the y-axis is downward, and the contrast of strokes is getting larger and larger. The collection of these blocks is on the plane: layer 0, which is formed by x-axis and y-axis, When z-axis=0.

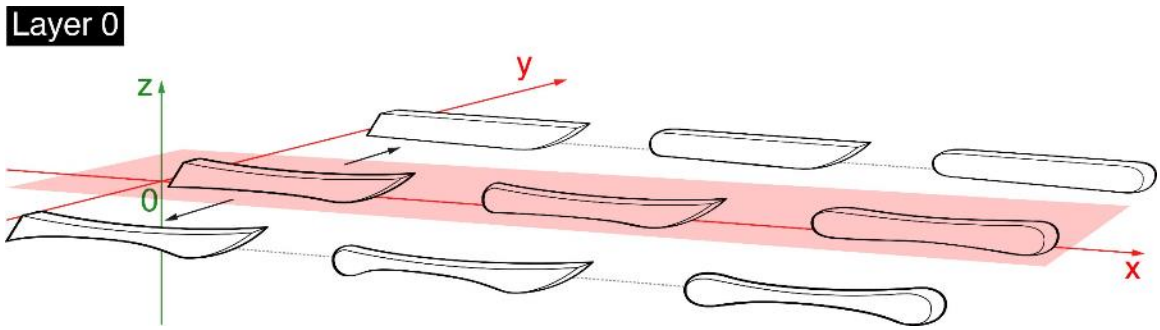

Figure 40 Blocks collection of official script on layer 0.

Then, abstract and deform these blocks. On the basis of maintaining the original characteristics, the positive direction of the z-axis is upward, the blocks are getting rounder, the negative direction of the z-axis is downward, and the blocks are getting more and more square. Following the z-axis in order from top to bottom, the key planes are layer 1, layer 0.5, layer -0.5, layer -1:

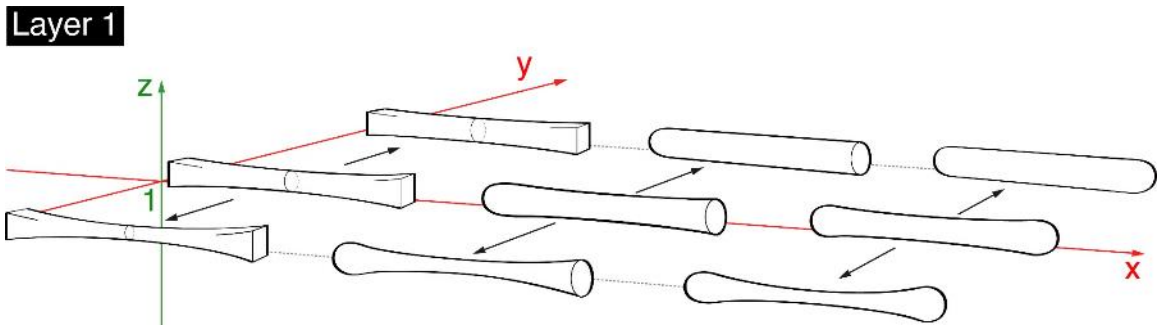

Figure 41 Blocks collection of official script on layer 1.

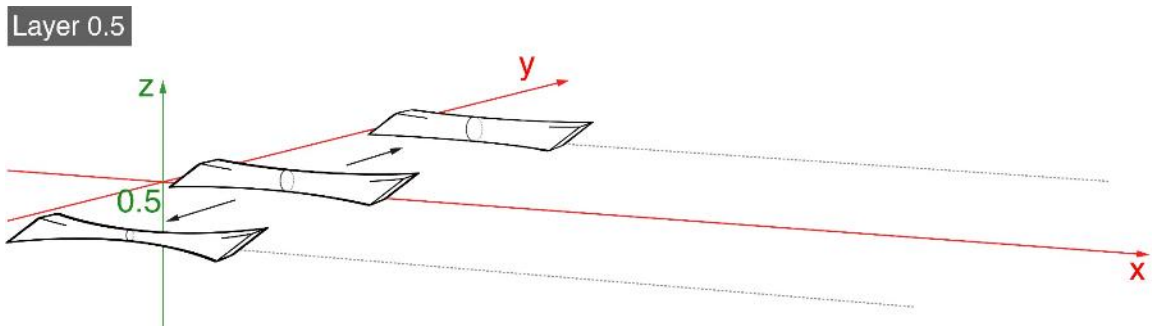

Figure 42 Blocks collection of official script on layer 0.

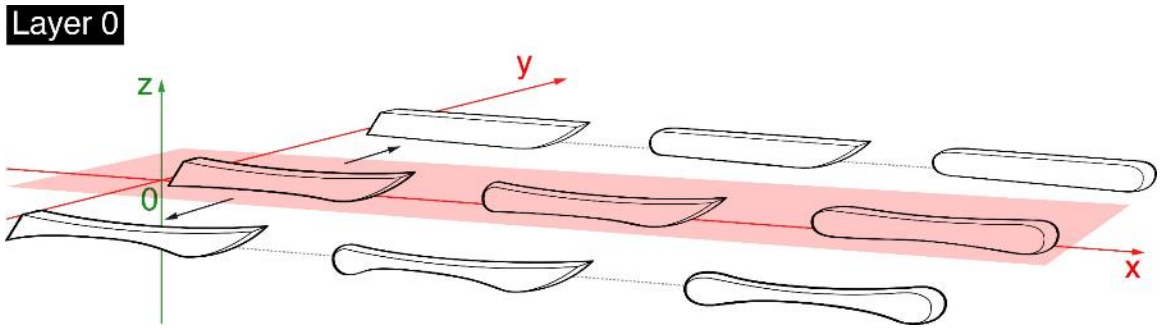

Figure 43 Blocks collection of official script on layer 0.

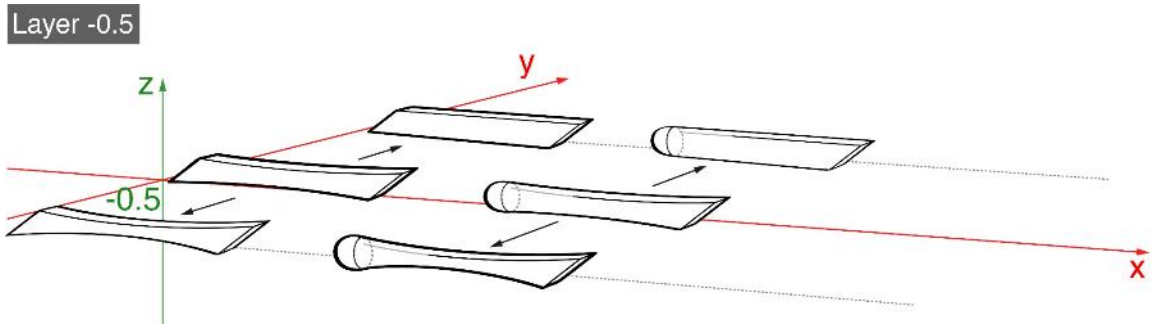

Figure 44 Blocks collection of official script on layer -0.5.

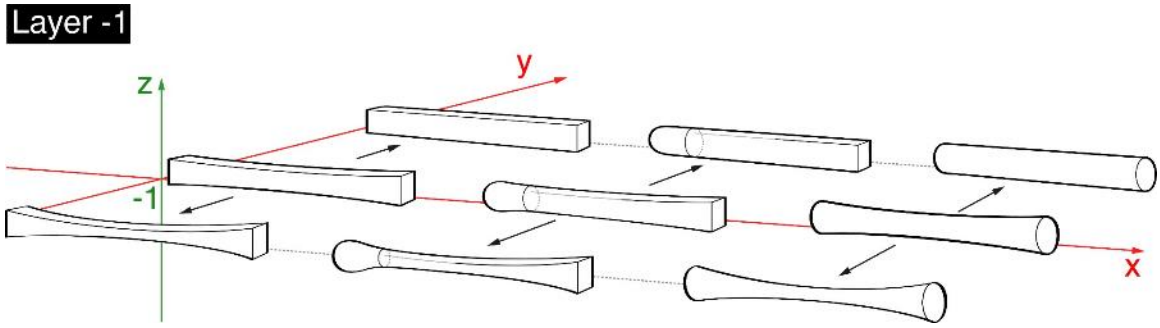

Figure 45 Blocks collection of official script on layer -1.

Integrating all the key blocks into the three-dimensional map of x, y, z, it can be observed that all the blocks are gathered in a cuboid:

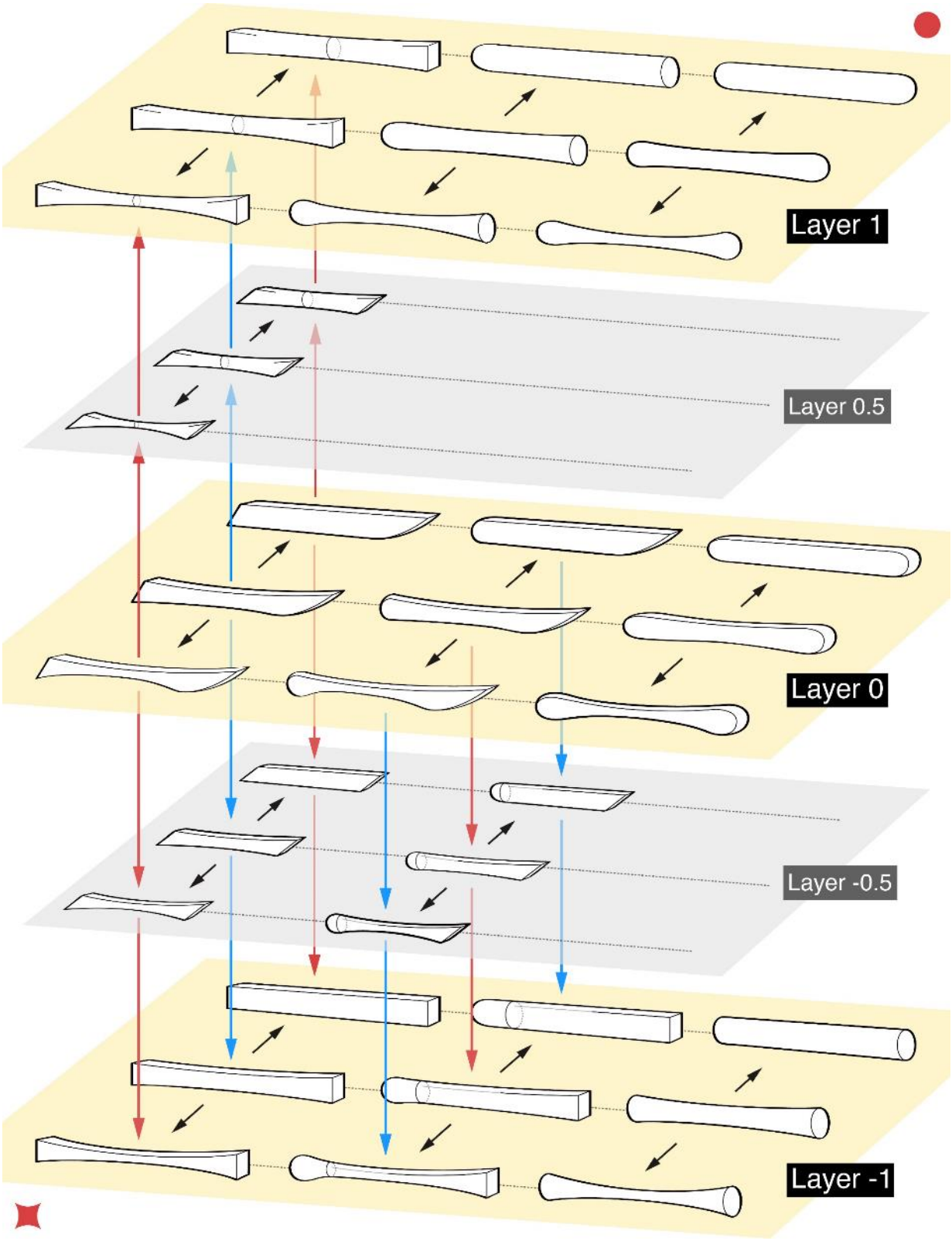

Figure 46 Blocks collection of official script.

Blocks collection of regular script.

The same process can be used to draw the blocks collection of regular script. Following the z-axis in order from top to bottom, the key planes are layer 1, layer 0.5, layer -0.5, layer -1:

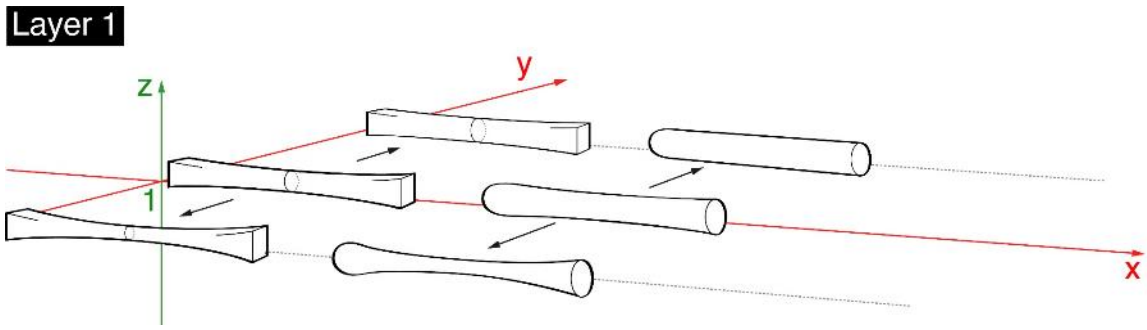

Figure 47 Blocks collection of regular script on layer 1.

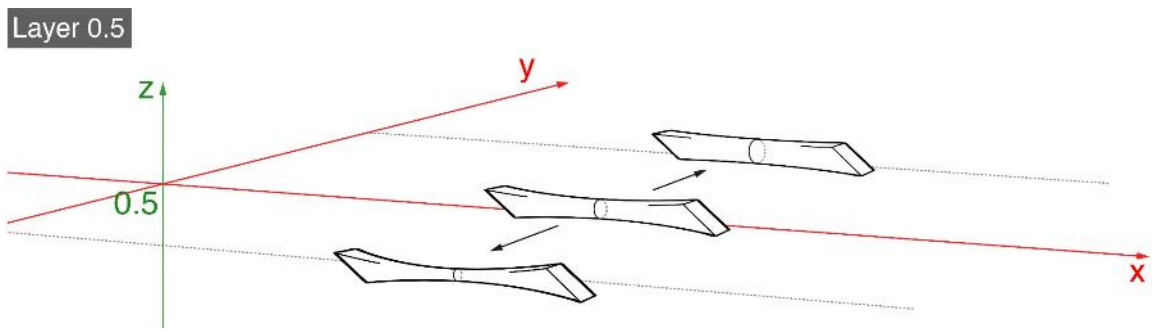

Figure 48 Blocks collection of regular script on layer 0.5.

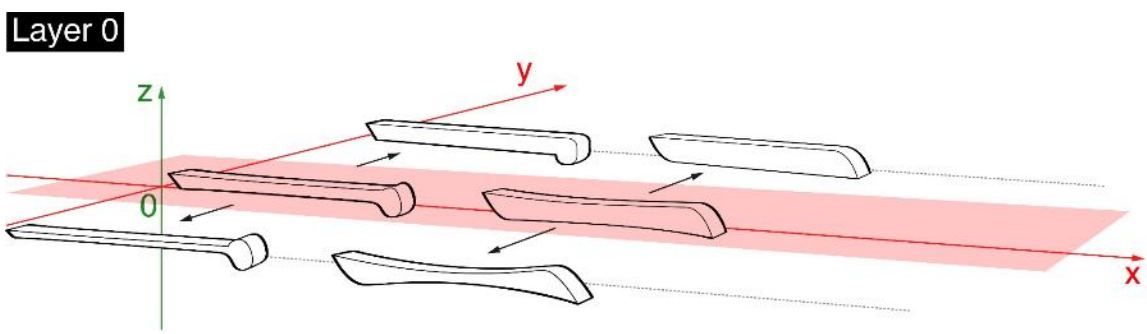

Figure 49 Blocks collection of regular script on layer 0.

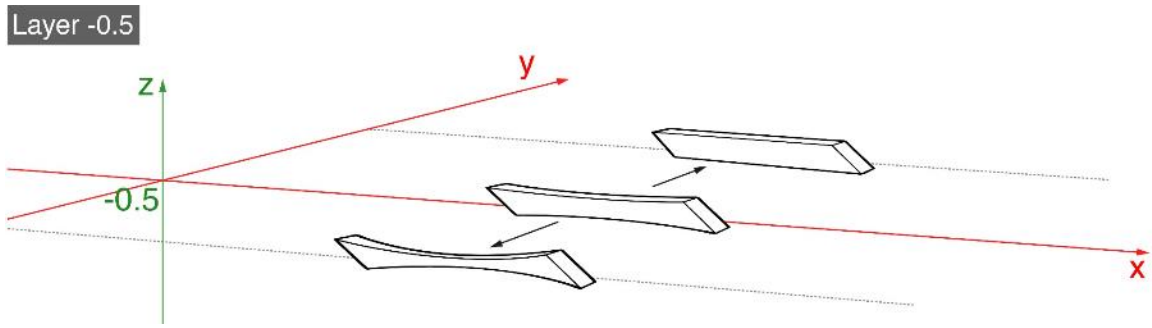

Figure 50 Blocks collection of regular script on layer -0.5.

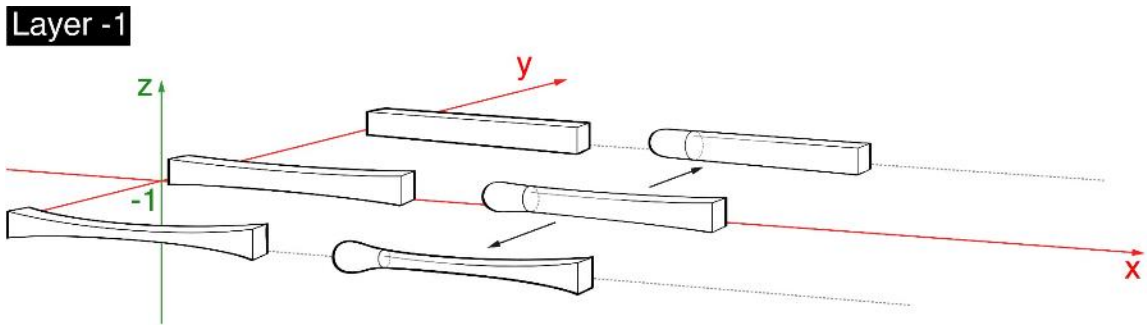

Figure 51 Blocks collection of regular script on layer -1.

Integrating all the key blocks into the three-dimensional map of x, y, z to get the cuboid:

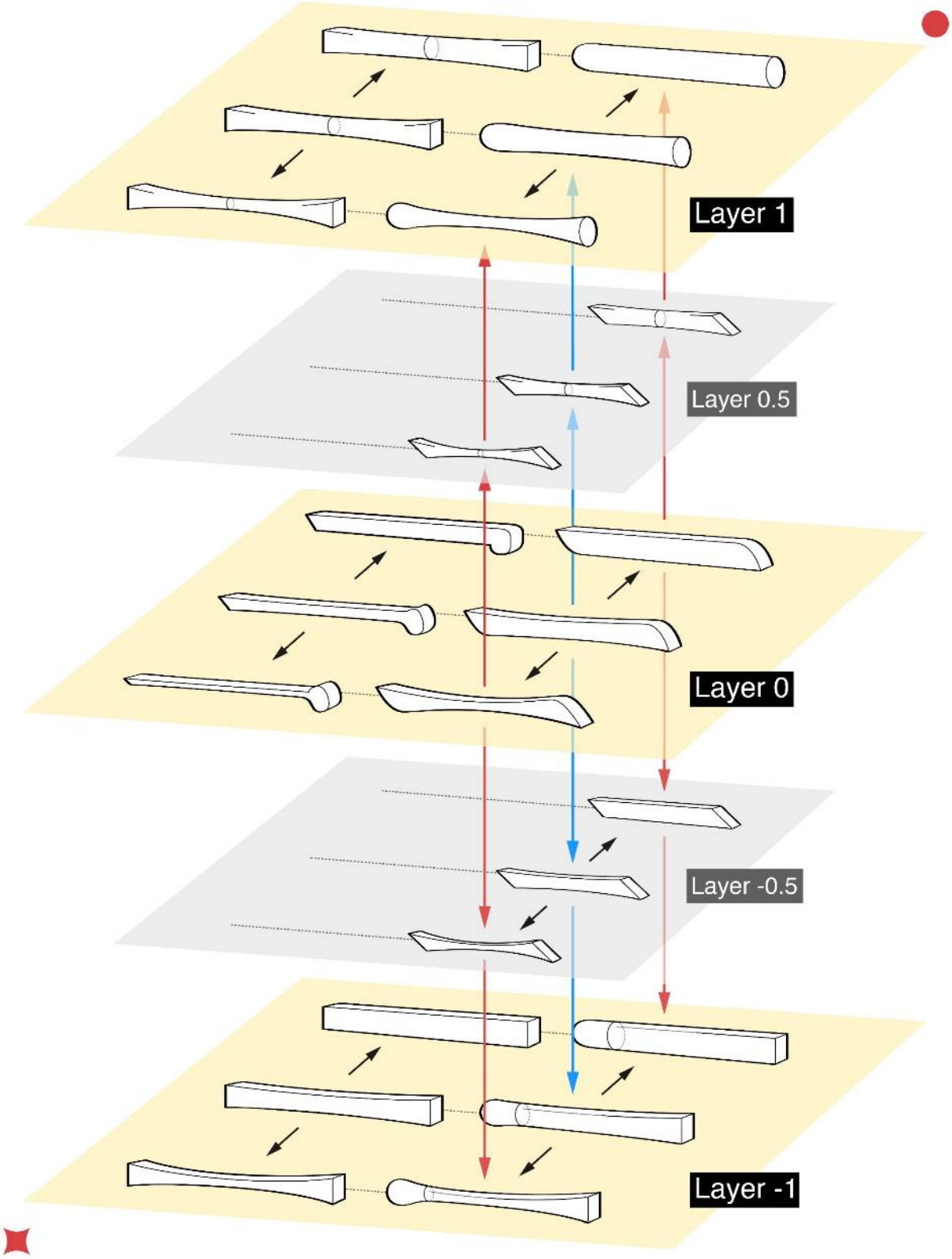

Figure 52 Blocks collection of regular script.

Because calligraphy strokes always have thickness contrasts, any point besides points located at the edge of these two cuboids can be selected to get a block. In addition, the designer can select any block and perform two-dimensional scaling, intercepting portions, changing direction to get blocks with various shapes. “In characters where elements are repeated, it is difficult to avoid mechanically repeating the elements. Slight variations in the elements are added to create tension. This, in turn, allows the character to have a greater overall cohesion” (Williams, 2002, p. 16). By the same token, when assembling blocks, the principle is creating changes in unity and seeking harmony in differences.

From the process of blocks development, it can be found that the closer the position of the selected block is to layer 0, the more similar its shape to the calligraphy stroke. The farther away from layer 0, the more abstract its shape.

In this way, if step 3.5 add connections was skipped, assemble blocks to the structure directly. If not, curve the block according to the continuous part of the structure, then, assemble blocks to the structure.

3.7 Test and Refine

Build a prototype to test whether this design obeys ergonomic requirements and whether it can be realized mass production by existing industrial manufacturing techniques. “A full-size testing model is suggested, in order to help the designers to get a better understanding of the overall proportions and form features” (Li, 2016, p. 85). Determining materials and manufacturing techniques based on form, adjusting and refining form based on materials and technologies. Integrating form, ergonomics (human-related functions) and manufacturing (technical and production related functions) to refine the concept, which part has issues (overall proportion and shape, structure or blocks), go back to the corresponding step to adjust and continue the steps that follow to ensure the design form.

Regarding color and texture, at least since the 1940s, Western literature has permeated the veneration of Chinese furniture, "the type of minimally decorated object executed solely in hardwood timber, where the effect is achieved solely through the deployment of certain geometrically simple forms" (Clunas, 1988, p. 101). Therefore, there is one option of color and texture, no matter what material is chosen. The main part of the furniture should use hardwood, or finishing technology to create the color and pattern of hardwood. Only some small and

insignificant components can use other cost-effective materials to build the piece. The second option is black paint which is stylized from the ink. Because of the ink shading, the surface can have smooth and rough changes to create different reflection effects.

"Testing and refining" is an iterative process that requires constant adjustments and repeats back to steps 3.3, 3.4, 3.5, and 3.6 to confirm that the overall design style of the furniture is not altered.

3.8 Final Design Plan

At the end of this process, the designer should have a complete final design plan to manufacture cost-effective Chinese style furniture which includes the determination of the furniture form, material, finishing, and corresponding manufacturing method.

Chapter 4

Application Result

This chapter will demonstrate the guidelines and design flow chart that have been developed in previous chapters. A piece of Chinese style furniture which is influenced by Chinese calligraphy culture and can satisfy users' cultural and functional needs of contemporary life can be expected as the result of applying these guidelines.

4.1 Confirm Components

This design guide applies to any type of furniture. However, to demonstrate the guidelines, I will develop a coffee table. I have observed that many of my female friends who live in single-family apartments have a type of coffee table with a relatively low height that can be used by sitting on the ground or a mat. So, in this chapter, the guideline will be applied to this kind of coffee table.

Storyboard

Figure 53 Storyboard.

User requirements

1. A coffee table with a relatively low height.

2. Can be used by sitting on the ground or a mat.

3. Can fulfill user's most daily needs of the table.

Usage environment: Single-family apartment.

Usage scenarios and experience

1. The cosmetics are placed on the coffee table, and the user sits on the carpet to make him or herself up in the morning.
2. On weekends, the user reads magazines and has tea and snacks on the coffee table.

To draw a conclusion, the components of this coffee table are table top and table legs, and the table leg quantity can be any number. The identified components in this demonstration are a tabletop and three legs.

4.2 Confirm Shape

According to the required functions, the circled are the selectable shapes. The overall shape of the product needs to be wider than the height, and the angle can be arbitrary.

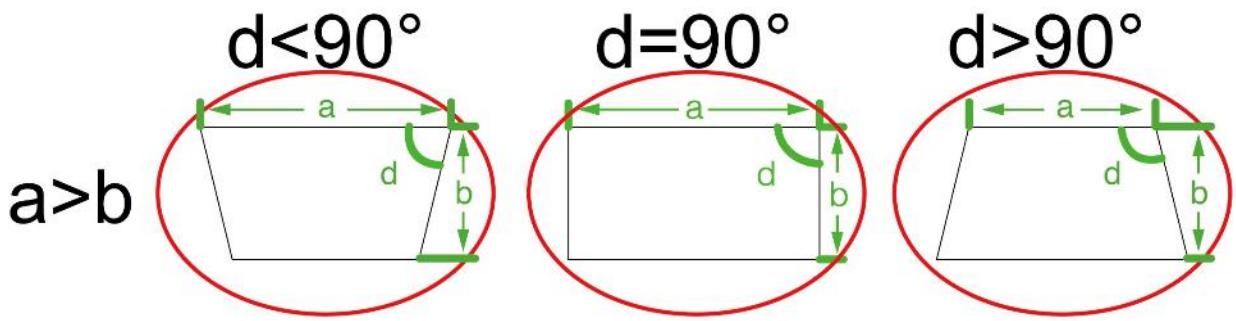

Figure 54 Shapes.

4.3 Build Structure

According to the definitions in Sections 4.1 and 4.2, use wires to show the structure.

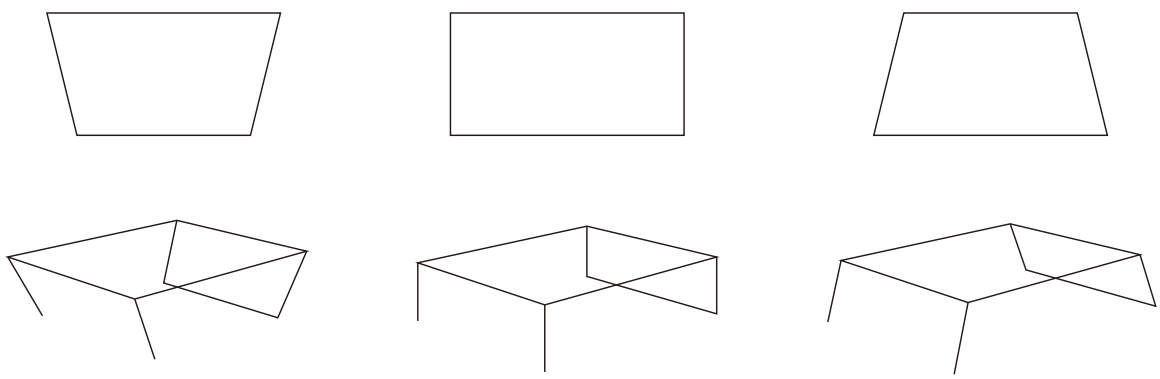

Figure 55 Build structures.

4.4 Assemble Blocks into Structure

Because adding connections is not an optional step, if assembling blocks to structure directly, the designs are as follows:

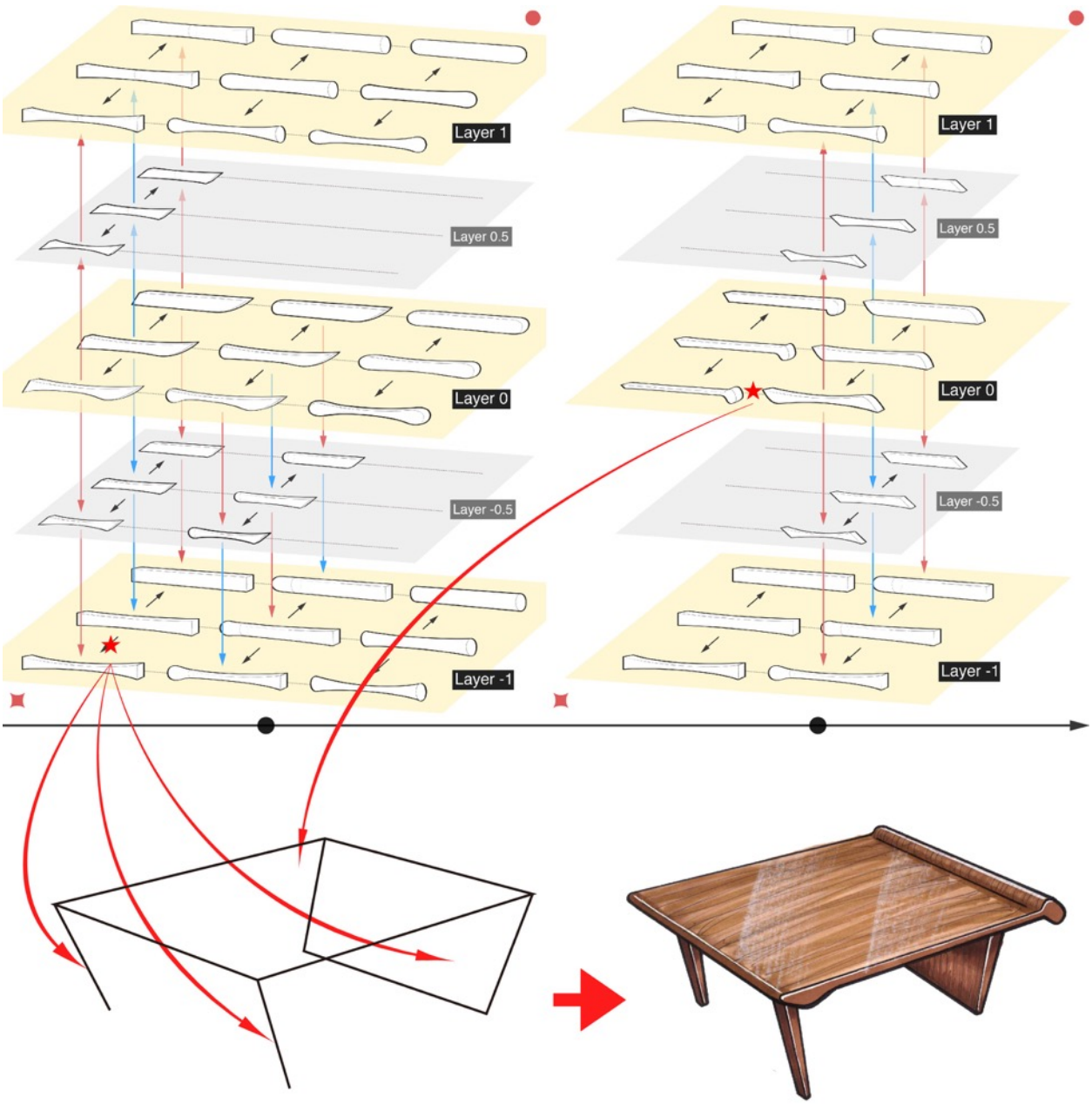

Figure 56 Assemble blocks into a structure.

The same structure can be used to derive an infinite design by selecting different blocks or making different changes to the blocks.

Figure 57 Example of changing blocks.

4.5 Add connections

Due to function, references are necessary, and angle change is inevitable if choosing to implement the step of adding connections. Therefore, after adding connections, the specification of the angle will be relatively loose. In addition, taking a reference of the side view will be very helpful for adding connections.

After the connections are added, the blocks are selected and combined into the structure. If the connected structure forms a new continuous whole, the block can be bent along the trajectory, or several blocks can be merged to form a continuous whole.

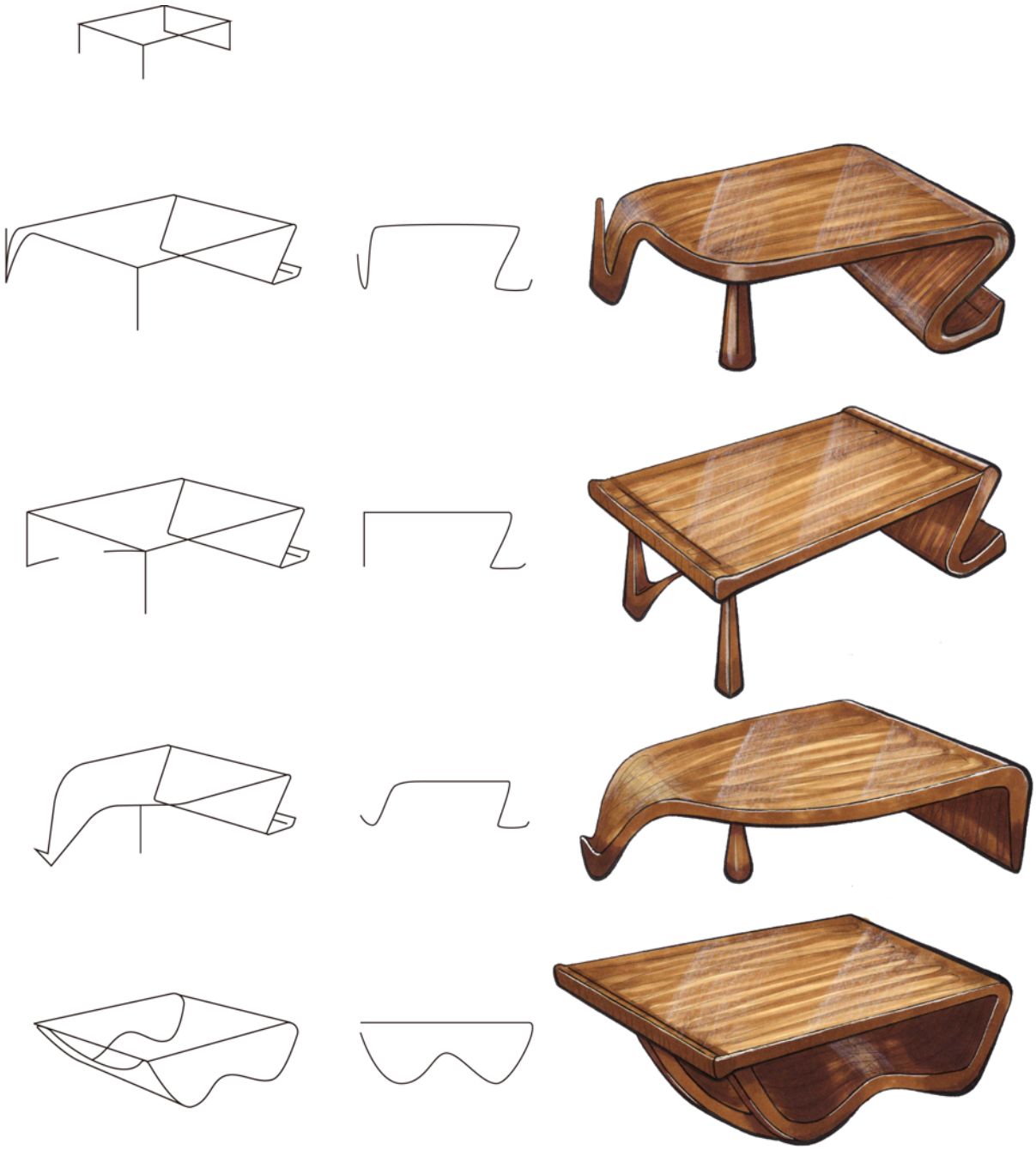

Figure 58 Add connections.

4.6 Test and Refine

Because the furniture form will become more abstract after the connection is added, and all the blocks must ensure the thickness changes, if using solid wood for manufacturing, there will be a lot of waste, which cannot meet the mass production needs. Therefore, plastics are generally selected for the manufacture of such products. But this does not mean that wood cannot be used to mass produce such organic form products. Plywood is used to bend and create gaps at different distances to achieve the same effect as the thickness variation of the block. It is more convenient to use a side view to refine the design.

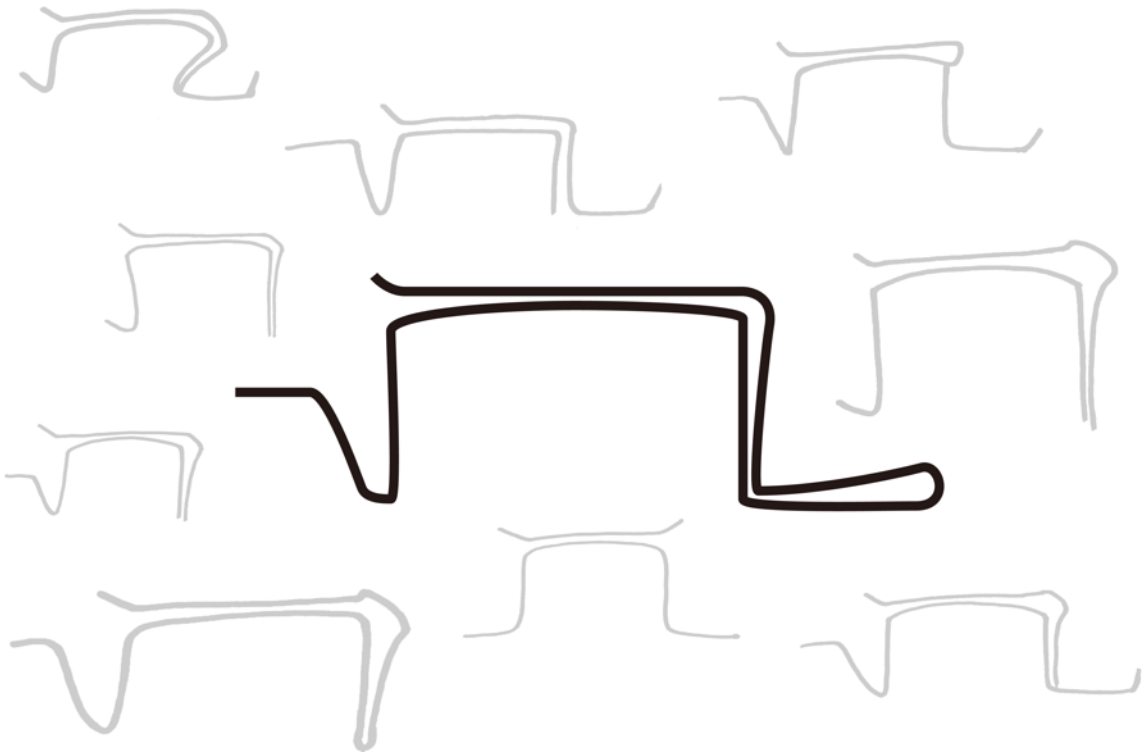

Figure 59 Side views for fast concepts generating.

The side view of the product has curved and smooth lines, and, from other angles, the beauty of curvaceous of the whole product can also be seen.

Figure 60 Refined concept 1.

Due to the size limitations of plywood on the market, the structure needs to be segmented. There is another concept refined from the former one.

Figure 61 Refined concept 2.

However, through analysis, it is found that there are support problems in this solution, which will affect the functional realization of the product. Therefore, the following solution is obtained through improvement.

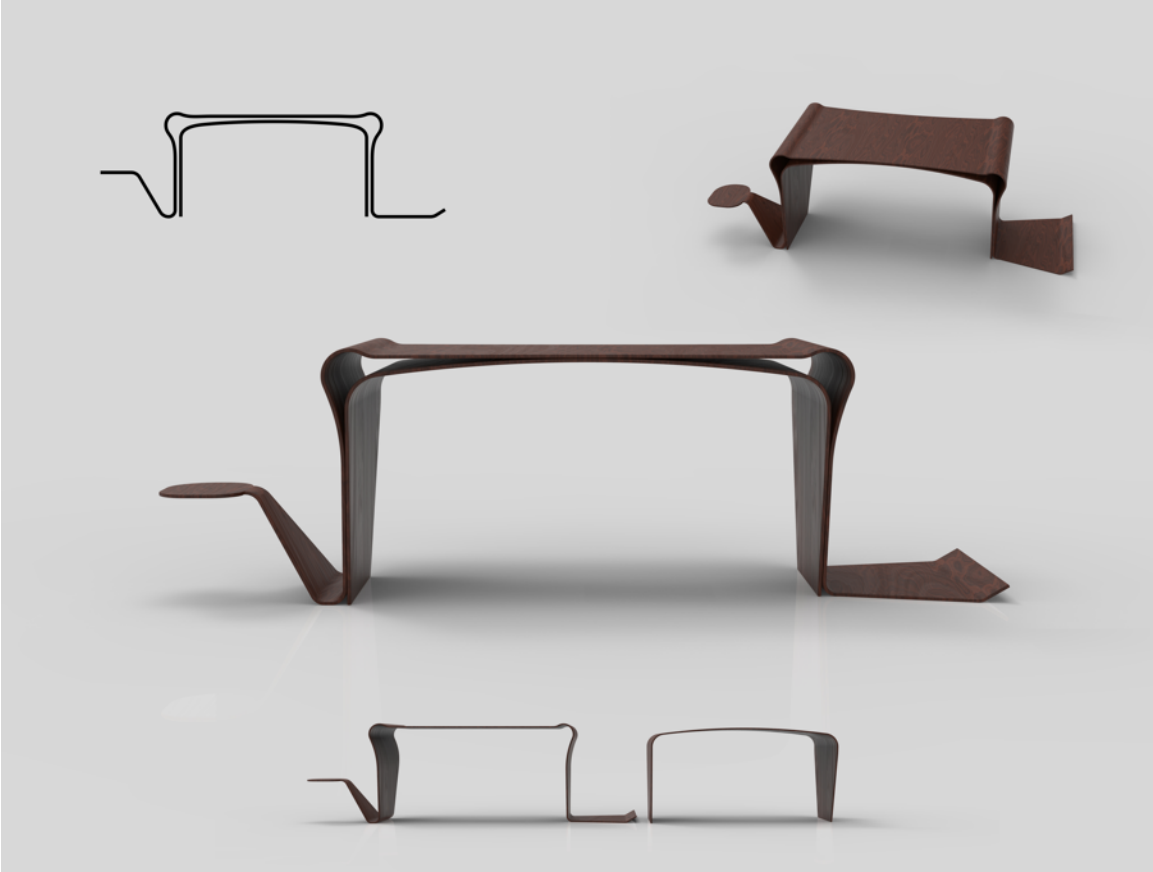

Figure 62 Refined concept 3.

Since the human-machine relationship of the target product in this demonstration is relatively simple, by referring to the same type of product size and upper body data, the size can be roughly determined and tested in a more efficient and convenient way.

Figure 63 Size test 1.

Figure 64 Size test 2.

Figure 65 Size test 3.

4.7 Final Design Plan

After all these steps, there is a complete final design plan.

Measurement:

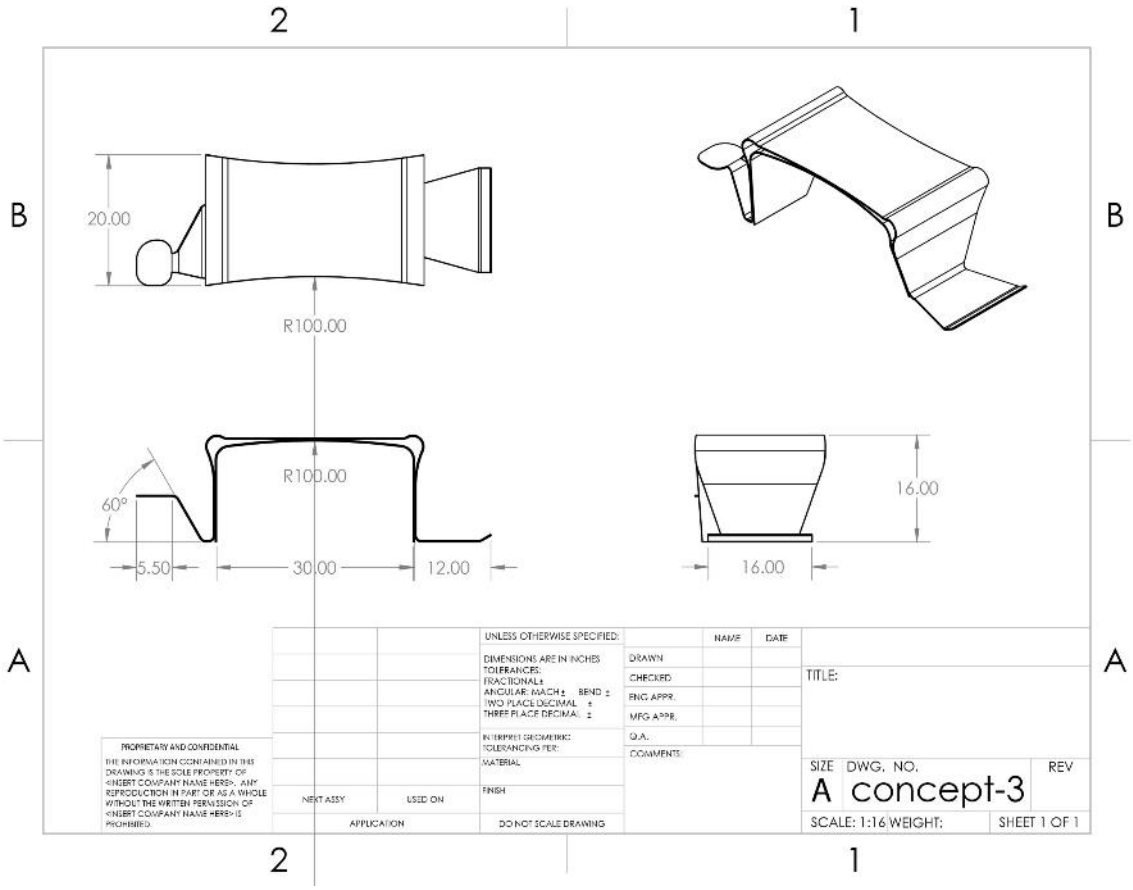

Figure 66 Measurement.

Making process:

Because of the form, the manufacture method will be vacuum forming the plywood. First of all, the molds of the following shapes should be built.

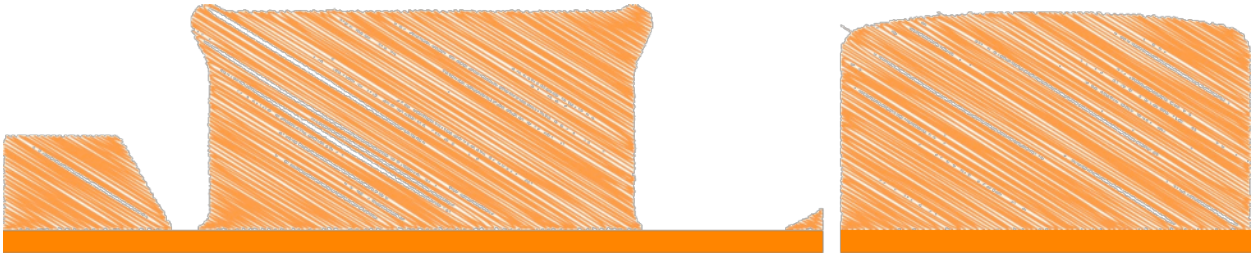

Figure 67 Molds.

Since the molds will be really big, they will not be totally solid.

Figure 68 CNC molds pieces.

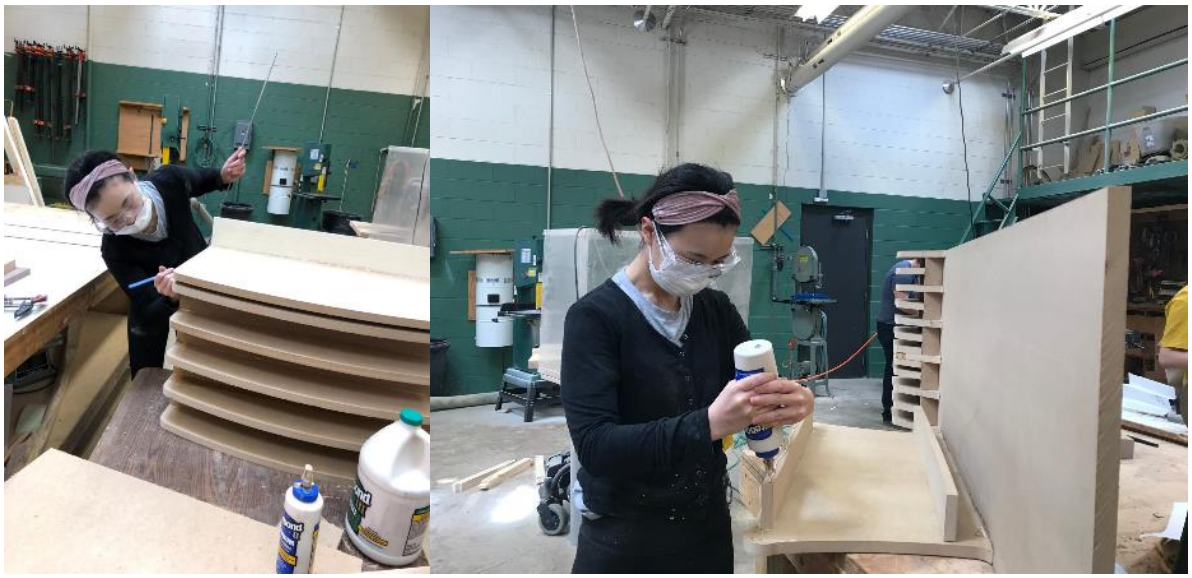

Figure 69 Build molds structures.

Figure 70 Add tops to the molds.

Figure 71 Sand the sharp edges.

Figure 72 Vacuum form.

Figure 73 Bended plywood.

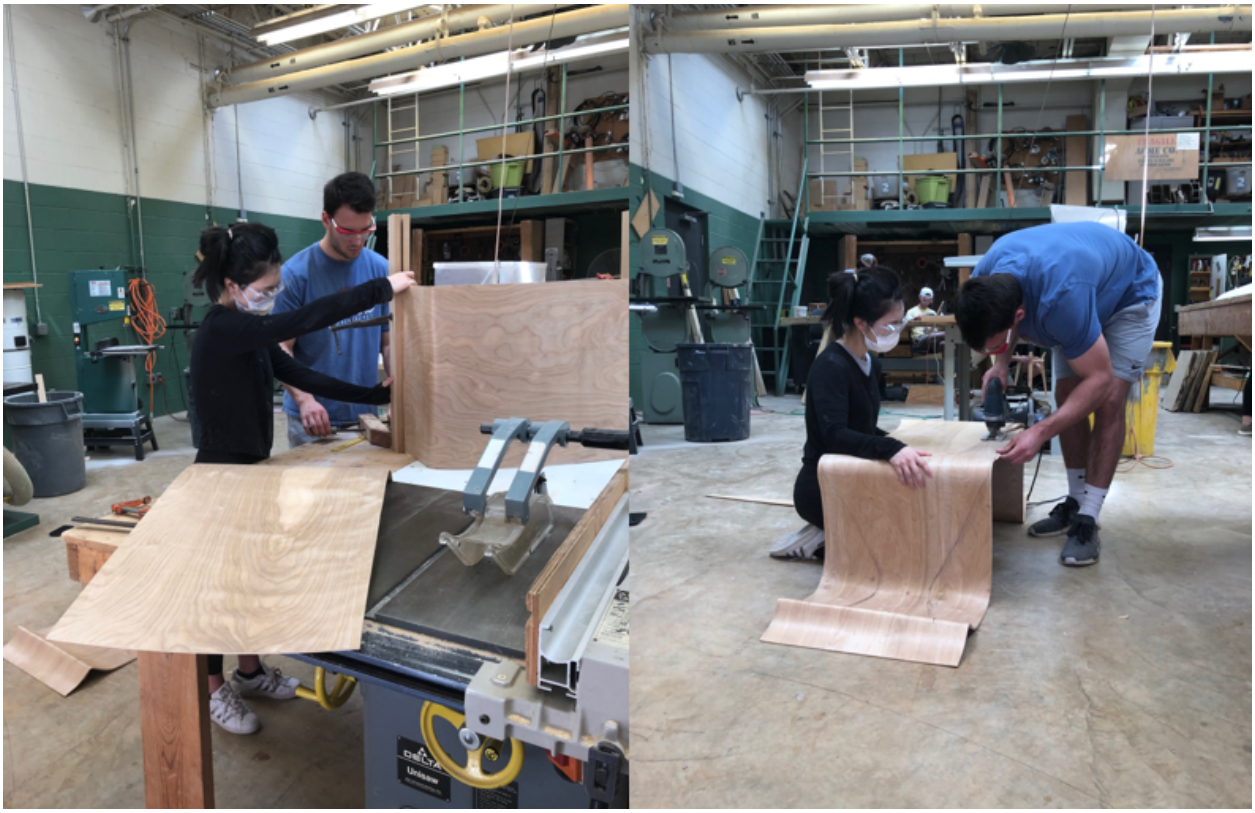

Figure 74 Cut the shape.

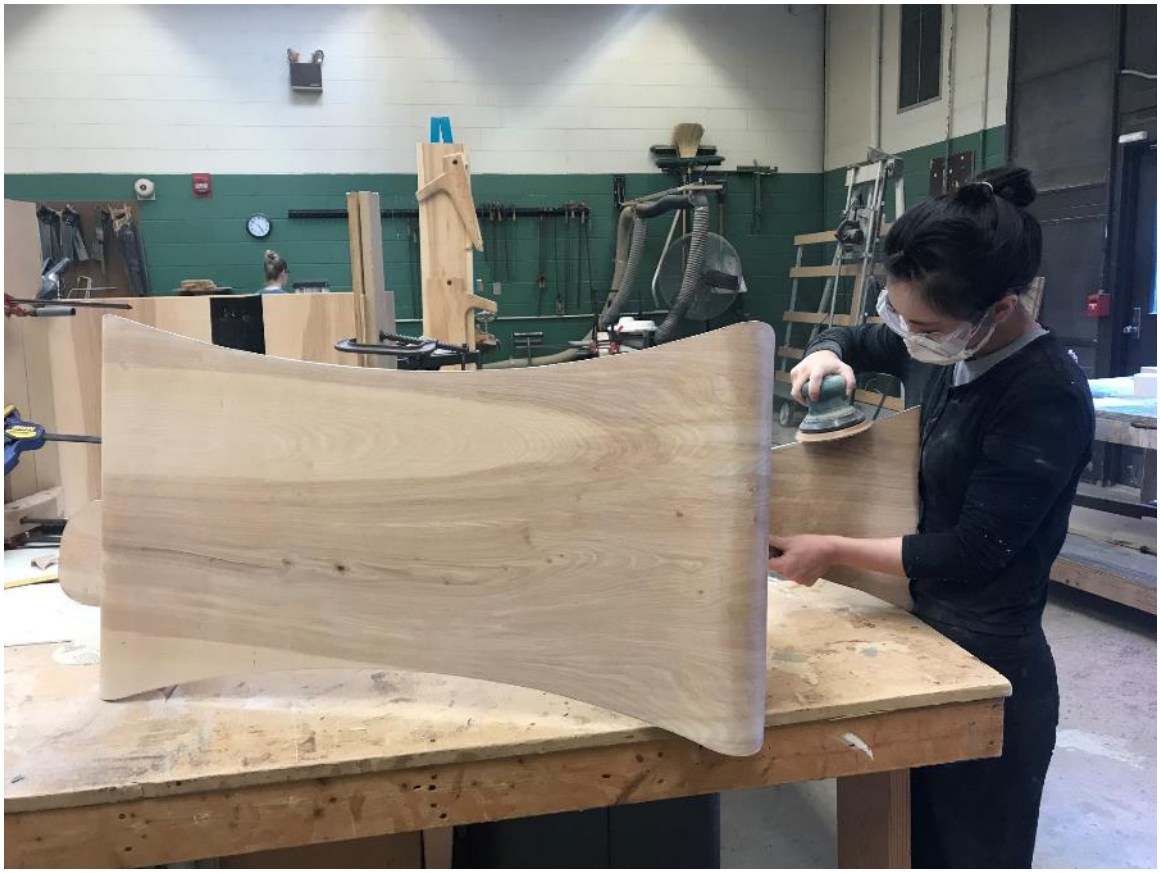

Figure 75 Sand the edges.

Prototype photo.

Figure 76 Prototype photo 1.

Figure 77 Prototype photo 2.

Figure 78 Prototype photo 3.

Figure 79 Prototype photo 4.

Figure 80 Prototype photo 5.

Figure 81 Prototype photo 6.

Figure 82 Prototype photo 7.

Figure 83 Prototype photo 8.

References

Bao, H., Liang, Y., Liu, H.-z., & Xu, D. (2012). A Dataset for Research of Traditional Chinese Painting and Calligraphy Images. *2010 2nd International Conference on Information and Multimedia Technology (ICIMT 2010). vol. 42*, pp. 136-143. Singapore: IACSIT.

Baxter, S. (1999). *Deep Design.* Glasgow, UK: Duncan of Jordanston University.

Brand , S. (2017). *Challenges and Trends Facing Furniture Manufacturers in 2018*. Retrieved from California's Manufacturing Network: https://www.cmtc.com/blog/furniture-manufacturing-challenges-trends-2016

Brislin, R. W. (1993). *Understanding culture's influence on behavior.* Honolulu, Hawaii: Fort Worth : Harcourt Brace Jovanovich College Publishers.

Chiang, Y. (1973). *CHINESE CALLIGRAPHY AN INTRODUCTION TO ITS AESTHETIC AND TECHNIQUE.* Cambridge, Massachusetts: HARVARD UNIVERSITY PRESS.

Clark, W. (2006). *A Medieval Book of Beasts: The Second-Family Bestiary, Commentary, Art, Text And Translation.* United Kingdom: Boydell Press.

Clunas, C. (1988). *Chinese furniture.* London: Victoria and A. Museum, Bamboo.

Dahl, S. (2004, 01). *An Overview of Intercultural Research: The Current State of Knowledge.* London: CEE Publishing.

De Leur, K. R., Drukker, J. W., Christiaans, H., & Rijk, T. d. (2006, 01). Cultural differences in product design: a study of differences between the South Korean and the Dutch kitchen environment. *J of Design Research, 5*.

De Souza, M., & Dejean, P. H. (1999). Interculturality and design: Is culture a block or encouragement to innovation? *Proceedings of the International Conference of Design Research: Design Cultures.* Sheffield Hallam: Sheffield Hallam University and The European Academy Of Design.

Dresser, C. (2003). Principles of Decorative Design. In C. Gorman, *The Industrial Design Reader.* New York, NY, United States: Allworth Press.

Du , Z. (2015). *The Chinese Language Demystified.* Newcastle upon Tyne: Cambridge Scholars Publishing.

Fernie, C. E. (1995). *Art History and its Methods: A critical anthology.* London: Phaidon Press Ltd.

Fleming, J., & Honour, H. (1999). *A Dictionary of Architecture and Landscape Architecture.* London: Penguin Books.

Goh, Y. (2005). *Guidelines to Develop Product Forms from Chinese Calligraphy.* Retrieved from Masters thesis: https://etd.auburn.edu/handle/10415/604

Gosset, D. (2013). *Italy's political earthquake major warning for EU*. Retrieved from Global Times: http://www.globaltimes.cn/content/764610.shtml

Graves, M. (1951). *The Art of Color and Design.* New York, Toronto, London: McGRAW-HLL BOOK COMPANY, INC.

He, L. (2015). *Chinese Writing. Translation of 两汉碑刻隶书字体研究. Study on the Stele Engraved Clerical Script in the Han Dynasty.* Beijing: Beijing Book Co. Inc.

He, R. (1991). *A History of Industrial Design.* Beijing: BEIJING INSTITUTE OF TECHNOLOGY PRESS.

Heskett, J. (1986). *Design in Germany 1870-1918.* London: Trefoil.

Hinchman, M. (2009). *History of Furniture: A Global View.* the University of Nebraska-Lincoln: Bloomsbury Academic.

History.com Staff. (2009). *Industrial Revolution - Facts & Summary - HISTORY.com*. (A+E Networks) Retrieved from History.com: http://www.history.com/topics/industrial-revolution

Hitti , N. (2018, 11 08). *10 of the most iconic pieces of Bauhaus furniture*. Retrieved from dezeen: https://www.dezeen.com/2018/11/08/bauhaus-furniture-designs-chair-tables-chess-set-baby-cradle/

Horn, R. (1985). *Memphis : objects, furniture, and patterns.* Philadelphia: Pa. : Running Press,.

Jackson, A. (2019). *History of Furniture Design: Timeline & Evolution*. Retrieved from Study.com: https://study.com/academy/lesson/history-of-furniture-design-timeline-evolution.html#/partialRegFormModal

Joseph, U. A. (2013). *The 'made in Germany' Champion Brands. Nation branding, innovation, and world export leadership.* London and New York: Gower Publishing.

jpanichella. (2011, 7). *Design Student Bent Plywood Lounge Chair Project*. Retrieved from woodworkingtalk.com: https://www.woodworkingtalk.com/f9/design-student-bent-plywood-lounge-chair-project-28027/

Kubler , G. (1967). *STYLE AND THE REPRESENTATION OF HISTORICAL TIME.* New Haven: Department of the History of Art, Yale Uniuersity.

Lai, T. C. (1982). *Chinese Calligraphy: An Introduction.* Seattle: University of Washington Press.

Lee, K.-P. (2004). Design Methods for Cross-cultural Collaborative Design Project in Redmond. In D. Durling, A. De Bono, & J. Redmond, *Proceedings of Futureground, Design Research Society International Conference.* Monash University.

Li, J. (2016). *Design Guidelines for designing Ming Dynasty Style furniture suited for Modern life*. Retrieved from AUETD: http://hdl.handle.net/10415/5368

Lin, Y. (1936). *My Country and My People.* London: W. Heinemann.

Manning, E. (2016). *exploring the influence of the memphis group, david bowie's favourite furniture designers*. Retrieved from i-D: https://i-d.vice.com/en_uk/article/j58yap/charting-the-memphis-group39s-enduring-influence-from-david-bowie-to-taco-bell-uk-translation

Moalosi, R., Popovic, V., & Hickling-Hudson, A. (2007, 11). Culture-orientated Product Design. *INTERNATIONAL ASSOCIATION OF 50CITIES OF DESIGN ESEARCH*.

Moalosi, R., Popovic, V., Hudson, A., & Kumar, K. L. (2005). *Integration of culture within Botswana product design.* Taiwan: National Yunlin University of Science and TechnologyYunlin.

Norman, D. A. (2004). *Emotional Design: Why We Love (or Hate) Everyday Things.* New York, USA: Basic Books.

Northern Italy. (2004). *Insight Guides*, 220.

Oxford English Dictionaries. (1989). *Stylize*. Retrieved from http://www.oed.com/view/Entry/192334?

Oxford English Dictionaries. (2008). *Culturalize*. Retrieved from http://www.oed.com/view/Entry/270004?redirectedFrom=culturalize - eid

Postell, J., & Postell, J. C. (2007). *Furniture Design.* Cincinnati University: John Wiley & Sons,.

Qiu, X. (2000). *Chinese Writing. Translation of 文字學概論 by Mattos and Norman. Early China Special Monograph Series No. 4. Berkeley: The Society for the Study of Early China and the Institute of East Asian Studies.* Berkeley: University of California.

Radice, B. (1995). Memphis. *Thames& Hudson*, 122.

Röse, K. (2004). The Development of Culture-orientated Human Machine System: Specification. In *Analysis and Integration of Relevant Intercultural Variables in Kaplan.* Netherlands: Cultural Ergonomics.

Ruedi, K. (1998). *BAUHAUS DREAM-HOUSE: ARCHITECTURAL EDUCATION IN THE AGE OF IMAGE REPRODUCTION*. Retrieved from http://discovery.ucl.ac.uk/1317853/1/287872.pdf

Schein, E. H. (2009). *The Corporate Culture Survival Guide (NEW AND REVISED EDITION).* San Francisco, USA: Jossey-Bass.

Schenker, M. (2018, 01 22). *Design Trend: The Bauhaus Design Movement*. Retrieved from Creative Market-Inspiration : https://creativemarket.com/blog/bauhaus-design

Schlerf, P. (2019, 1 29). *Understanding German culture: a starting point*. Retrieved from expatica: https://www.expatica.com/de/about/culture-history/understanding-german-culture-a-starting-point-107006/

Sparke, P. (2013). *An Introduction to Design and Culture: 1900 to the Present.* New York: Routledge.

Tomlinson, P. (2018). *How new furniture materials are transforming home interiors*. Retrieved from STYLE: https://www.scmp.com/magazines/style/tech-design/article/2123501/how-new-furniture-materials-are-transforming-home

Trope, C. (2013, 6 29). *HE B5 CHAIR*. Retrieved from COOPER HEWITT: https://www.cooperhewitt.org/2013/06/29/the-b5-chair/

Turner, C. H., & Trompenaars, A. (1993). *The Seven Cultures of Capitalism: Value System for Creating Wealth in the United States, Britain, Japan, Germany, France, Sweden and the Netherlands, Piatkus.* London, UK: Doubleday Business.

Understanding Formal Analysis. (2011). Retrieved from The J. Paul Getty Museum: https://www.getty.edu/education/teachers/building_lessons/principles_design.pdf

Wasser, J. (2006). *Germans and Indians Spätzle Westerns*. Retrieved from SPIEGEL ONLINE: http://www.spiegel.de/international/germans-and-indians-spaetzle-westerns-a-410135.html

Watson, A. (2002). *Mod to Memphis : design in colour 1960s-80s.* Sydney: Powerhouse Pub.

Wei, Q. (2013). *Regular Script of Ouyang Xun. The Nineteen Ancient Poems.* Beijing: Jindun

publishing House.

William, W. (1981). *Chinese Calligraphy Its History and Aesthetic Motivation.* Hong Kong: OXFORD UNIVERSITY PRESS OXFORD NEW YORK MELBOURNE.

Williams, E. J. (2002). *Relations Between Chinese Calligraphy and Photography.* Auburn: Hornors College of Auburn University.

Yang, Y. X. (2003). *Culture – Trends for Contemporary Design in the 21st Century, 6th Asian Design Conference.* Retrieved from https://pdfs.semanticscholar.org/636a/9028877b1154bc584911d3d190fcc7fded48.pdf

YDSTIE, J. (2018). *How Germany Wins At Manufacturing — For Now*. Retrieved from National Public Radio: https://www.npr.org/2018/01/03/572901119/how-germany-wins-at-manufacturing-for-now

Ye, P. (2012, 05 17). *A Brief Introduction of Chinese Calligraphy History.* Retrieved from GUOXUEWANG: http://www.guoxue.com/?p=5944

Ye, P. (2012, 05 17). *The Artistic Characteristics of Chinese Calligraphy.* Retrieved from GUOXUEWANG: http://www.guoxue.com/?p=5938

Zeijderveld, J. V. (2018). *3D printed furniture on its way to homes of the future*. Retrieved from sculpteo: https://www.sculpteo.com/blog/2018/02/21/3d-printed-furniture-appliances-of-the-future/

Zhang, F. (2010, 01 11). *Expo legacy will live on*. Retrieved from Expo 2010 Shanghai China: https://web.archive.org/web/20110101084727/http://en.expo2010.cn/a/20101101/000005.htm

Zhang, Q. (1975). The Essence of Chinese Culture. *China New Press*.

Zhuang, Y.-G. (2009, 12). Transform and Application of Clerical Script. *Thesis of Department of Painting and Calligraphy*(7), pp. 175-225.