CANINE DESIGN: A DESIGN APPROACH FOR CREATING MODERN DOG PARKS

Don Richard Doyle Jr

Except where reference is made to the work of others, the work described in this thesis is my own or was done in collaboration with my advisory committee. This thesis does not include proprietary or classified information.

_____
Don Richard Doyle Jr

Certificate of Approval

Christopher Arnold Assistant Professor Industrial Design	Tin-Man Lau, Chair Professor Industrial Design
Randall Bartlett Associate Professor Industrial Design	Stephen L. McFarland Acting Dean Graduate School

CANINE DESIGN: A DESIGN APPROACH FOR CREATING MODERN DOG PARKS

Don Richard Doyle Jr

A thesis

submitted to

the faculty of

Auburn University

In partial fulfillment of The

requirements for the

Degree of

Master of Industrial Design

Auburn, Alabama
May 11, 2006

CANINE DESIGN: A DESIGN APPROACH FOR CREATING MODERN DOG PARKS

Don Richard Doyle Jr

_____
Signature of Author

_____
Date of Graduation

THESIS ABSTRACT

CANINE DESIGN: A DESIGN APPROACH FOR CREATING MODERN DOG PARKS

Don Richard Doyle Jr

Master of Industrial Design, May 11, 2006
(B.S.E.V., Auburn University, 2004)
(A.S.C.A.I.V., Virginia College at Birmingham, 2002)

184 Typed Pages

Directed by Tin-Man Lau

With the growing popularity of dogs being considered members of the family within the United States, many cities are now providing dog parks along with their traditional playgrounds, to be used by the community. Modern dog parks usually consist of an area where dogs can run leash free and, in some cases, provide owners and their pets with exercise and play equipment. Although existing dog park equipment is great for certain dogs, it does not truly represent a major part of the dog population and the activities they enjoy.

This document looks at the dog park as a system of products that needs to be redesigned in order to increase functional satisfaction and popularity. By creating an approach to designing new activities, games, and exercises for dogs and their owners, future dog parks will be able to better represent the needs of dogs within that community.

As well as outlining a new design approach, this document will also demonstrate the use of this approach to successfully design dog park amenities that better represent current dog populations in the United States.

ACKNOWLEDGEMENTS

The author wishes to thank his future wife, Beverly Harrison and loving parents, Don and Joan Doyle, for all of their support, patience and guidance over the years. He would like to thank his graduate committee, Professor Tin-Man Lau, Associate Professor Randall Bartlett, and Assistant Professor Christopher Arnold, as well as PlayCore Inc., for their help in the completion of this document and a great education.

Style Manual or Journal used	American Psychology Association
Computer software used	Microsoft Word Adobe Illustrator Adobe Photoshop Microsoft Excel Solid Edge

TABLE OF CONTENTS

LIST OF FIGURES

LIST OF TABLES

CHAPTER 1: INTRODUCTION

1.1 PROBLEM STATEMENT

With companies scrambling to become leaders in the multi-billion dollar pet product industry and consumers becoming more aware and cautious of bad design, there is a need for a system or method of designing canine products. The biggest problem with designing products for dogs is that the dog has little or no say in the design process, so their needs often suffer when design considerations are made. This problem is one reason why existing dog park equipment, while great for some breeds, does not adequately represent a large majority of breeds currently owned in the United States. That is why there should be guidelines to follow when designing for dogs so that the wants and needs of all dogs are taken care of.

1.2 NEED FOR STUDY

The World Canine Organization estimates that there are approximately 40 million dogs world-wide or about one for every 150 people. This statistic, along with the changing attitudes towards pets, as members of the family, has caused a recent boom in the pet products industry. In the United States alone, in 2002, American pet owners spent over $28.9 billion on their pets, and in 2003 the total expenditures reached nearly $30 billion. BCC, Inc. reports that the recent growth in all segments of the pet industry has

provided an opportunity for both existing players and new entrants, who have been increasingly active since the beginning of the 1990's. In an industry that has been growing for over ten years and is still on the ground floor, economically, companies are constantly looking for a way to become stable leaders in the industry. New entrants into the industry are also in need of an edge that will separate them from the rest.

A growing number of players; consolidation among manufacturers, retailers, and service providers; and globalization of the American economy have transformed the maturing pet industry into a dynamic, highly competitive environment. This competitive environment gives the consumer more power, and companies are more inclined to provide quality products for the consumers' wants and needs. With so much emphasis being put on "good" design now, consumers are becoming increasingly intolerant of poor design, and look for indicators of good design. If there was a proven system for designing pet products, specifically dog park equipment, then common problems found in poor design could be eliminated. Then companies would be able to accommodate the growing demand for well designed dog park facilities.

1.3 OBJECTIVES OF STUDY

The following are the objectives to be accomplished by this study.

Objectives:

- To conduct extensive research on existing design methods pertaining to the design of dog parks.
- To research existing dog park equipment and their effectiveness.
- To research current breed populations among American households.
- To research instinctual activity sets among popular dog breeds.
- To identify current product design methods that work well for human and canine products.
- To identify current product design methods that do not work well for human and canine products.
- To develop a new approach for designing dog park equipment.
- To demonstrate the effectiveness of the new approach through the design of a modern dog park.

1.4 LITERATURE REVIEW

1.4.1 AN INDUSTRIAL DESIGN METHODOLOGY

Ever since Walter Gropius, the "Father of Industrial Design" founded The Bauhaus in 1919, design methods have evolved to what they are today. Auburn University Industrial Design, founded by Dr. Walter Schaer, a direct descendant from the Bauhaus way of thought, is a theory and methodology based school that focuses on the

“three functions” of industrial design. The human function, technical function and production function are the bases of Auburn University’s design methodology and include subcategories such as aesthetics, ergonomics, anthropometry, human factors, production and marketing. All of these methods are targeted towards a consumer and ask the question what does the consumer want or need. When considering what a user needs, a designer can think about the hierarchy of needs. “Taking the idea of a hierarchy of needs and applying it to human factors, the following order is proposed: Pleasure, Usability and Functionality.” (W.S. Green and P.W. Jordan) Aesthetics is the study and application of form and ornament of a design, while ergonomics deals with the functionality or user interaction with the design.

> “Clearly a product will be useless if it does not contain appropriate functionality. A product cannot be usable if it does not contain the functions necessary to perform the tasks for which it is intended. If a product does not have the right functionality it will dissatisfy the user. In order to be able to fulfill user needs on this level, the human factors specialist must have an understanding of what the product will be used for and the context and environment in which it will be used.” (W.S. Green and P.W. Jordan)

In theory all of these methods should work with any user, but in most cases they are created to design products used by humans, so when designing a product for dogs which makes an animal the primary user, certain changes need to be made to the system, or method of design, used to better suit the user. For example, when a product is intended to be used by people and their pets the designer should consider what the human, the buyer, and the animal, the user, wants or needs.

1.4.2 MAN AND DOG

Is there a need for better animal product design? Should a designer care what the animal needs if the owner is the ultimate consumer or buyer? The relationship between humans and their pets has reached a level that would answer yes. "Dogs are an established part of people's routine and life-style. This applies particularly to their leisure time, the use of which is determined in part by the demands of their pets." (Reinhold Bergler) Today pets, particularly dogs, in most cases, are considered members of the family, and when purchasing products for pets, people put as much emphasis on purchase decisions for their pets as they would for a child. "Ergonomics suggest that consumers are becoming increasingly intolerant of poor design, and look for indicators of good design." (W.S. Green and P.W. Jordan)

Although owners may not obsess over their pet's pleasure, in most cases there is a desire to maintain the safety and well-being of their pet. This desire of safety for animals is reason enough for the designer to want to produce better products for animals. "Safety is an obvious criterion for a 'usable' product; all consumer products should be safe, efficient, reliable and durable. An unsafe product is unusable in that it will certainly not be efficient or reliable and may not be durable either." (W.S. Green and P.W. Jordan)

1.4.3 EXISTING DOG PARKS

Six years ago, the nation had only 20 dog parks. Today there are more than 500. Largely located in urban and suburban areas, where wide-open spaces are hard to come by, dog parks are also becoming popular in rural areas. The definition of a dog park is still being established, but here are some general ideas. After exploring several dog park

websites the term seems to apply to quite a variety of circumstances. Since most parks don't allow dogs even on a leash, when a park pops up where dogs are allowed, it gets designated by the users as a "dog park," even if the creators did not have that in mind at all. At its simplest the term "dog park" generally is used where the design of the park, and its amenities make it clear that dogs are invited, not just permitted. Most people, however, use "dog park" to mean a place where dogs can play off leash.

Although dog parks vary greatly in size and amenities, they are largely defined by the fences that surround them. Unlike legal off-leash exercise areas of regular parks, they physically separate the animals and those who enjoy their company from those who do not. There in this giant playpen, the supervised dogs can run and play off-leash, freely and safely, while owners are free to relax alone or socialize with one another. In some cases, these fenced areas are separated further into large and small breed areas so if fights do occur, there are no unfair advantages.

Having a place to take your dog to exercise and socialize with others is a great step in the right direction, but most communities want more than just an open area for their dogs to run. This is why many dog parks have begun to provide other amenities such as watering facilities, territorial markers, and exercise equipment. The most popular of these amenities is known as an “Agility Course” which is a series of obstacles that a dog must pass as quick as possible. “This sport, introduced in England by John Varley in 1978, is a derivation of equestrian jumping competitions.” (Royal Canin) “The sport was made official in France in 1988 and agility championships are now held, including the annual European Masters competition. In 1989, when the sport was introduced to the

world, numerous countries joined the fourteen European countries that already recognized the sport." (Royal Canin)

1.4.4 DEMOGRAPHICS

Every three to five years the American Veterinary Medical Association publishes statistical information on dogs in America. Included in these stats are breed populations, total pet ownership location, age and sex, number of dogs owned per household, etc. A designer can use this information to determine who they are designing for and where specific problems and/or needs are located within the United States.

1.4.5ACTIVITY SETS

Every dog has an instinctual set of activities they must act out in order to remain emotionally stable. Unless they are able to reenact these innate activities, they can become depressed, introverted and sometimes aggressive towards humans. Although it is easier to determine instinctual activity sets among pure bred dogs, even mixed breeds and "mutts" have retained something from there bloodline that they want and need in order to maintain their quality of life. "Some of the most complicated activities are displayed in the behavior shown by sporting dogs and herding dogs. Such activities rely on the special sensory powers for this efficiency and, when these are combined, they make up the complex characteristics of dogs." (Geary)

> "Hunting, killing, and retrieval of game is one of the most basic of specialized activities. Dog owners should never forget that they have a predatorial animal in their care – a pet Yorkshire Terrier that chases and kills a wounded wild animal is behaving perfectly

> naturally. Even the toy dogs and utility group retain pronounced hunting capacities, although these are not developed in their usual life." (Geary)

1.4.6 STANDARDS AND VARIETY

Standard is defined as "the group of characteristics that defines a breed." It serves as a reference point when a dog is examined to judge its conformation to the behavioral and morphological characteristics of the breed.

Variety, according to Raymond Triquet, is "a subdivision within a breed wherein all specimens have a common, genetically transmittable characteristic that distinguishes them from other specimens of that breed." For example, "the Longhaired German Shepherd is a variety of the German Shepherd breed, though it is possible that the offspring of a Longhaired variety may not have long hair." (Royal Canin)

The AKC (American Kennel Club), as well as other canine organizations, has established certain standards that dogs must meet to be considered a registered breed of dog. "Each breed has a standard which is established by the breed association of its country of origin. Only the original association may modify the standard. The standard established in the country of origin is the only one recognized by the FCI (World Canine Organization), despite the fact that some countries try to impose their own varieties." (The Dog Encyclopedia) Included in these standards are the height and weight of each breed.

> "The weight and height of domestic dogs vary dramatically from one breed to the next, perhaps more than any other species in the animal kingdom. The Chihuahua weighs only one kilogram, yet the Great Dane can weigh more than one hundred kilograms. Compare this to humans or domestic cats, whose largest members are only two to two and a half times the size of the smallest. These

> great variations in size result in differing morphology, physiology, metabolism, behavior and interaction with humans. A dog also has different health and nutritional needs depending on its size. Based on their weight and height at full maturity, dogs are divided into four general categories: small, medium, large and giant." (The Dog Encyclopedia)

Even within the four general categories there are still variations in height and weight that must be considered when designing a product for dogs. There are even more size variation amongst dogs when considering the overwhelming percentage of mixed breeds or "mutts" in the canine community.

> "Unlike mixed breed dogs that are the product of a cross between two dogs of different breed or a purebred dog and one of undetermined heritage, mutts are impossible to classify accurately since there is no rhyme or reason to their bloodlines. Mutts are the result of a cross between two dogs of unknown breed. Experts estimate that as much as 60% of all dogs in France are mutts or mixed breeds, though it is difficult to determine precisely how many exist." (The Dog Encyclopedia)

1.4.6.1 ADDITIONAL CONSIDERATION

"Methodically, to discuss the displacement of the animals, one must consider all the types of movements which animals carry out." (Giovanni Alfonso Borelli) "One must also consider the different motions and displacements of the parts of the animal which are either internal or external." (Borelli) Dogs have five basic positions or modes of transportation; sitting, standing, walking, running - or "gait" - and swimming. Although these tasks are familiar to humans, they are somewhat different by comparison. For example, "quadrupeds do not walk by moving alternately two legs apposed diagonally while the other two are immobile. According to the prevailing opinion quadrupeds would

walk by displacing forwards two legs alternately while the other two remain standing." (Borelli) Gait, or how a dog runs, is also an important design consideration.

> "Gait tells much about a dog's structure that is not revealed when he is standing still for it reflects his physical coordination, balance of body and soundness. The correlation between gait and structure is frequently misunderstood, and in a time when growing interest in dogs as family pets tends to lessen awareness its significance is often overlooked." (Rachel Page Elliot)

Two other big differences between humans and dogs are dexterity and motor skills. "What dogs lack in dexterity with their paws, they make up for by the efficient use of their mouths. Behaviorally, the mouth is an important part of the body. Its strength is tremendous; not only can dogs crack enormous bones, kill animals, and carry objects, but they can support the whole weight of their bodies by their mouths." (Michael Geary) "The retrieving breeds are most developed in this carrying use of the mouth and are 'soft-mouthed', in that they can carry shot game delicately without bruising the flesh." (Michael Geary)

Animals also have different clearance requirements than humans. "Until recently the Animal Welfare Act required that greyhounds and dogs in the greyhound family be shipped in narrow kennels that would prevent them from turning around during a flight. It was thought that such a maneuver might cause them spinal injury. This has since been shown false. USDA standards now require that all dogs and cats be transported in kennels large enough to allow them to turn around, stand, sit erect, or lay comfortably." (Barbara Nicholas)

There is clearly an overwhelming variety involved in the size, ability and standards of dog breeds. In order to consider all dogs' needs, design should be breed

specific and should satisfy all size variations among the target demographic associated with the particular product or system being designed.

1.4.7 EXTRACTING METHODS

To create a new system or method of designing products that are used by both humans and dogs, it is not necessary to start from scratch because a lot of the methods that Auburn Industrial Design uses can be applied to any design project. For example, the circular design process, time scheduling, required performance criteria, brainstorming, sequence of use, and the comparative product charts can all be used to design products for animal users. It is necessary to extract some of the processes from these methods in order to better suit the targeted demographic. Systematic tools and techniques such as the interaction matrix and the interaction table must be revised to introduce dual interaction, or, in this case, three-way interaction; the human's interaction with the animal, the human's interaction with the product, and the animal's interaction with the product. It is also a possibility that user surveys and questionnaires will need to be tested or replaced by user trials or some other techniques for researching consumer demands.

A major hurdle in creating a new system for designing products intended for dogs will be applying human factors and anthropometry techniques to animals. The designer must consider totally new factors that are attached to animals while not forgetting the human aspects needed to attract the consumer. The system of anthropometry, defined as the measure of man, may be interchangeable between humans and animals, but the recorded data only pertains to humans. A system of measuring dogs must be created in

order for a designer to be able to design a product that can be used by a large percentage of dogs. The designer must also consider the relationship between the measurements of humans and the measurements of animals when designing a product that is used by both man and dog.

1.5 DEFINITION OF TERMS

Aesthetic – relating to the philosophy or theories of aesthetics. Of or concerning the appreciation of beauty or good taste: *the aesthetic faculties.* Characterized by a heightened sensitivity to beauty.

AKC – American Kennel Club

Animal Welfare Act – The Animal Welfare Act was signed into law in 1966. While its original intent was to regulate the care and use of animals in the laboratory, it has become the only Federal law in the United States that regulates the treatment of animals in research, exhibition, transport, and by dealers.

Anthropometry – The study of human body measurements especially on a comparative basis.

Baiting – To set dogs upon (a chained animal, for example) for sport.

BCC Inc. – Since 1971, Business Communications Company, Inc. has critically studied the major market, economic and technological developments that have characterized industry to produce industry reports, newsletter and conferences.

Brainstorming – A method of shared problem solving in which all members of a group spontaneously contribute ideas.

Breed – A special variety of domesticated animals within a species.

Canine – An animal of the family Canidae, especially a dog.

Dexterity – Skill and grace in physical movement, especially in the use of the hands; adroitness.

Dog Park – A dog park is a facility set aside for dogs and their owners to exercise and play off-leash in a controlled environment. Parks vary in accoutrements, but a typical dog park is fenced; has separate, double-gated entry and exit points; a pond for swimming; hydrants for watering dogs; and tools to pick up and dispose of animal waste.

Ergonomics – An applied science concerned with the characteristics of people that need to be considered in designing things that they use in order that people and things will interact most effectively and safely also called *human engineering*, *human factors engineering*.

FCI – The Federation Cynologique Internationale was created on May 22nd, 1911 with the aim to promote and protect cynology and purepred dogs by any means it considers necessary.

Gait – A manner of walking or moving on foot. A sequence of foot movements (as a walk, trot, pace, or canter) by which a horse or a dog moves forward.

Kennel – A shelter for a dog.

Mixed Breeds – The product of a cross between two dogs of different breed or a purebred dog and one of undetermined heritage.

Mutts – An inferior dog or one of mixed breed.

Ornament – That which embellishes or adorns; that which adds grace or beauty; embellishment; decoration; adornment.

Quadrupeds – A four-footed animal.

Ratting – To hunt for or catch rats, especially with the aid of dogs.

1.6 ASSUMPTIONS OF STUDY

It is assumed that a standard system of designing dog parks, particularly dog park equipment, would improve the overall satisfaction of the user. Like the old saying, "if it isn't broken don't fix it", it is also assumed that there isn't an existing system, which works well, already used by designers in the pet product industry. Even after developing a standard system of designing dog park equipment, it can only be assumed that companies will accept it as a standard method of design. As animal-loving people who care if pets are receiving everything they need for a quality life, it is expected that other animal owners do the same. Everyone should be aware of bad design as well as good design, even for their pets.

1.7 SCOPE AND LIMITS OF STUDY

Due to time constraints and the overwhelming variety in dog breeds, it will be difficult to develop the same measurement information used for people for designing dog products. Instead, it will be more feasible to develop an approach or system of how to measure dogs and what information is needed. The scope of research will include all registered dog breeds as well as "mutts" and mixed breeds but will be limited to the United States for financial reasons. This research will also include general movements and activities instinctually performed by canines. Although extensive research will be done on systems of design currently used by companies in the pet product industry, any findings will be limited to companies willing to disclose that kind of information.

1.8 PROCEDURE AND METHODS

The objective of this document is to create and outline a new approach for designing dog park equipment. The following is a list of intended procedures and methods of accomplishing these procedures:

1. **Procedure:** To conduct extensive research on existing design methods pertaining to the design of pet products.

   Method: By contacting existing pet product manufacturers, by phone or face to face at trade shows, research will be done on how designers in the pet industry make the transfer from an education based on "human factors." There will also be an investigation into existing systems of design used in the pet industry already and how affective they are. Finally, these meetings or phone conversations will be used as brainstorming opportunities for possible solutions.

2. **Procedure:** To research existing dog park equipment and their effectiveness.

   Method: Using comparative product charts, questionnaires and user trials, research on existing dog park equipment will be documented within this text. As far as the effectiveness of existing equipment, through comparative

products charts and performance criteria scores, the existing equipment will be compared to the products rendered by following the new design approach.

3. **Procedure:** To research current breed populations among American households.

   Method: Using statistical data compiled by the American Veterinary Medical Association, relevant values on breed populations, population location, and pet owner demographics within the United States will be implemented in this document.

4. **Procedure:** To research instinctual activity sets among popular dog breeds.

   Method: After researching breed populations and ranking the most popular breeds currently owned in the U.S., further research into the instinctual activities of specific breeds will be documented in a list or table to be used by designers.

5. **Procedure:** To identify current product design methods that work well for human and canine products.

   Method: In order to test whether or not current design methods will work well for both human and canine products, it is necessary to take a product

used by both humans and dogs and go through these methods. Processes that are needed for both will be kept and others will be tagged as methods that do not work well for humans and canines. Then those processes should be separated accordingly into the Human and Animal Functions of the new design approach. Although these methods will be separated into the Human and Animal Functions, the designer will be able to look at both interchangeably.

6. **Procedure:** To identify current product design methods that do not work well for human and canine products.

   Method: Once methods that do not work well for both human and canine products are identified, the methods for human products will be discarded, and the methods that work well for canine products will be kept. Methods that are kept will be added to the Animal Function of the new design approach and will be specific to that section. The Animal Function will become more weighted in importance, overshadowing the Human Function. Designers will look at the animal side more heavily but cannot disregard the human side.

7. **Procedure:** To develop a new approach for designing dog park equipment.

   Method: After conducting all research on existing systems and methods, and identifying which methods belong in the Animal Function which will become

weighted higher than the Human Function, a new design approach will organized and documented in this text. This document can then be used to design future dog park equipment that represent a larger population of dogs, therefore being more effective than existing equipment.

8. **Procedure:** To demonstrate the effectiveness of the new approach through the design of a modern dog park.

   Method: Using guidelines outlined in the new design approach, a dog park that better represents current dog populations will be created. Through this process the effectiveness of the new approach will be tested and allow for any changes to be made.

1.9 ANTICIPATED OUTCOME

There is a strong possibility that many companies currently use a method of designing their products, but that all methods used vary from company to company. It is also likely that most systems of design in the pet industry are targeted towards the buyer and that the user, the pet, is not as highly considered in the design process, at least not as high as they should be. Overall, it is anticipated that fragments of design methods, used by companies, which work well and that fit into a more effective design process, will be discovered. The processes that do not work or need revising will be changed or dropped altogether. Through positive and/or negative feedback on current methods of design in

the pet industry, a new design approach, one that can be used by all companies currently producing dog park equipment, will be developed.

A probable solution for this problem will most likely be a systematic checklist that is followed step by step when designing dog park products. This list will consider the consumer and the user as separate entities, human and dog, and will aid the designer in satisfying both entities. The approach will include a new process called "breed specific design", which is intended to force the designer to focus on the user's needs separately. Other processes in the approach will be human factors, technical functions and production functions. Unlike the design methods used when designing products for people alone, the new system will put more emphasis on the canine factors instead of the human factors.

Once the effectiveness of the new design approach has been proven through the design of a modern dog park that meets all requirements stated in the new approach, there will finally be a system for designing dog park equipment that is better for the user. Eventually, all pet products will follow these guidelines making them well designed products that meet the consumers' satisfaction and the users' needs.

CHAPTER 2: APPLYING DESIGN METHODS TO CANINE PRODUCTS

2.1 DESIGNING FOR CANINE SIZE VARIATION

2.1.1 INTRODUCTION TO CANINE SIZE VARIATION

Since dogs are one of the most varying species in the animal kingdom in size, weight, behavior and interaction with humans, they are also one of the most difficult to design for. It was originally thought to be necessary to document all measurements for all dogs, but, through further research, it is clear that only the extremes involved within the target demographic are necessary for size considerations. Using current breed population information, a designer will be able to design for a larger majority while reducing the amount of size variation considerations needed during the design process. The designer can then educate the consumer as to why their design is best for a particular pet.

2.1.2 SIZE AND WEIGHT

Even when targeting a specific group of dogs, there are still substantial size and weight differences, even among the top ten breeds. Currently, the top ten most owned breeds in the United States include: the Labrador Retriever, Golden Retriever, German Shepherd, Dachshund, Beagle, Yorkshire Terrier, Poodle, Boxer, Chihuahua, and Shih Tzu. Among these breeds there is quite a gap between the largest and smallest members, but it still does not rival the variety when considering all breeds. The largest gap, within

the most popular breeds, is between the Chihuahua, standing 6.5 to 8 inches in height and only weighing 2 to 7 lbs., and the German Shepherd, standing 22 to 26 inches tall and weighing as much as 88 lbs. This is the gap by which the designer should base his or her size and weight parameters during the design process. By doing this, the designer is not limiting his design to only the top ten breeds, because it is not until the Great Dane, ranked 28th among most owned breeds in America, that a breed does not fit into those parameters.

2.1.3 GAIT AND LOCOMOTION

"Man, in directing the form and capacities of his dogs by selective breeding, has produced breeds with tremendous variation in their movement – the elegant striding Saluki, the waddling Bulldog, and the prancing Toy Poodle." (Geary) These breed variations in gait are some of the most interesting aesthetic features of dogs and points of great importance in the show-ring. The scale of a dog's movement can be almost unbelievable. Greyhounds cover about 18 feet in a single stride when racing and German Shepherds can "long jump" over 20 feet. A Dachshund, only 8 inches to the shoulder, can jump 3 to 4 times its own height, which is the equivalent of a man jumping 20 feet into the air.

Variations in skeletal framework relate to the work dogs have been bred to do, from man's emphasis on looks rather than functional soundness to interference with working structure through selective breeding programs. A dog's job qualifications must be clearly understood, for the differences influence form and structure and are reflected in individual gaiting styles as well as in quality of performance. Movement and the fine

control of motion are vital to the dog. “Compared to a dog, the speed of a horse is brutish power with little fine control.” (Geary) At the end of a race a horse needs time to slow down to avoid injury, while a dog can stop immediately.

2.1.4 DEXTERITY

Manipulation of objects is not an ability which is shown by most dogs, although there are some who are quite dexterous with their feet and use them for performing quite delicate operations. Dogs have little control of individual toes, like humans have with their fingers, and can only use their feet as a single force. “Performing Toy Poodles can hold balls between their feet and even roll them along but they are using the whole foot and have no capacity to bend their digits to grasp objects as do humans or monkeys.” (Geary) Like other animals without the ability to use their hands for picking things up, dogs have adapted their mouths as an alternative to the “opposable thumb”.

“As the dog is digitigrades – that is, it walks up on its toes – it is able to use the whole potential length of the limb for running. In having this facility, dogs have lost the capacity for the fine detailed movement that humans display with their hands.” (Geary) Much of what people do with their hands, dogs have to do with their mouths. Dogs use their mouths for carrying, and some mothers commonly move their puppies around by grasping them by the scruff of their necks and lifting them in their jaws. Although the retrieving breeds are the most developed in the use of their mouths, breeds known for their digging capabilities are among the most dexterous breeds. These breeds have the ability to control their feet individually and even favor one over the other implying that dogs can be right-handed or left-handed.

2.2 BREED SPECIFIC DESIGN

2.2.1 INTRODUCTION TO BREEDS

In 1984, the FCI formally approved Professor R. Triquet's proposal to establish a technical zoological definition of the concepts of dog group, breed, and variety. According to Prof. Triquet, breed is "a group of individuals with common characteristics that distinguish them from other members of their species and that can be genetically passed on to the next generation". He held that, "species is determined by nature while breed is determined by the culture or fashions of the show ring." (Royal Canin) Group is defined as "a group of breeds that have certain distinguishing characteristics in common that can be transmitted genetically." (Royal Canin) For example, dogs in the Herding Group have different morphology, but all instinctively strive to guard livestock.

The Kennel Club in Great Britain classifies the breeds of dog it recognizes into six groups. These are as follows: Hounds, Gundogs, Terriers, Working Dogs, Toy Dogs, and Utility Dogs. The American Kennel Club similarly incorporates all its accepted breeds into six groups – Hounds, Sporting Dogs, Terriers, Working Dogs, Toys, and Non-sporting Dogs.

In general, the American Kennel Club (AKC) and the Kennel Club of the United Kingdom (KC) correspond to each other – both incorporating the Pointers, Retrievers, Setters, Spaniels, and the Weimaraners in the same group. The Americans also include the Wire-haired Pointing Griffon in this group, which is not a breed that is recognized by the K.C. The Hounds, Terriers, Working Dogs, and Toys of both Kennel Clubs generally correspond. The few variations that exist arise mainly when a breed is recognized by one organization and not by the other. The English Utility group is equivalent to the

American Non-sporting Dogs group, again with one or two variations. Shih Tzus, for example, are included in the Utility group, but are classified as a Toy by the A.K.C. Tibetan Spaniels and Terriers, classified as Utility breeds in Britain, are not recognized at all by the A.K.C.

2.2.2 CANINE PSYCHOLOGY

"Sights, sounds, tastes, smells, and touch are signals from the environment. The things an animal does in response to these signals go to make up its behavior. If we wish to understand the behavior of a dog or any other animal, we must study its ability to receive and interpret sensory messages from the world in which it lives." (Davis)

> "Scientific psychology is a part of physics, or the study of nature; it is a record of how animals act. Literary psychology is the art of imagining how they feel and think."
>
> Santayana,
> *Scepticism and Animal Faith.*

The relevancy of canine psychology for this study is in the "wants" and "needs" of specific dog breeds in order for mental and physical health to be maintained. Like humans, dogs have separate wants and needs in their every-day lives. People, for instance, need food, water, and shelter and want expensive cars, electronic gadgets, and long vacations. Although dogs' wants are more elaborate than their needs, they are not as dramatic as humans or any more expensive. A dog can survive on food and water alone, but their life expectancy is greatly reduced unless other things, such as exercise and companionship, are also provided.

2.2.3 WHAT DOGS NEED

All dogs, regardless of breed, need the basics such as food, water, shelter, and medical attention, but the magnitude of the basic needs from one breed to the next differs greatly. Some breeds have the ability to control their daily intake of food, while others need their diets monitored at all times to avoid over or under eating. The same goes for water, since fluctuating drinking and eating habits can be a sign of illness. The amount of shelter a dog receives also varies widely among different breeds. Most of the herding and cattle breeds cannot tolerate being closed in and require lots of space with minimal shelter, while smaller breeds such as Chihuahuas and Shih Tzus require constant shelter from the elements and do not tolerate the heat or cold. By researching the needs of individual breeds, the designer will have a better understanding of potential design problems that need to be addressed.

2.2.4 WHAT DOGS WANT

The word "want" is used very loosely here because even though dogs do not need the following to survive, they do need them for their mental and physical well-being. "Dogs need to be wanted; you will find the most intelligent dog can become moronic and dull if no one takes a real interest in it, uses its name, and teaches it to make the most of its natural ability." (Cartledge) Companionship is essential to the dog, not only to supply its physical needs but to keep it from barking and annoying others, and to supply the activity, attention, and conversation the dog needs. Dogs are not solitary creatures. They love to watch and listen to their owners even when they appear to be relaxed in their beds: they cannot be switched on and off at will. It is essential to study breed

characteristics, the in-bred traits which cannot be erased without denying the dog its true purpose in the canine world. Every type of dog, the gundogs, the herding breeds, the terriers, the hounds, has things it must do.

This is the backbone of this study. In order to make the most of a dog and his owner's leisure time, there has to be something that makes him want to get out of the house to exercise and socialize with others. The challenge for the designer is to design equipment that represents the wants and needs of all breeds to ensure the success of any dog park.

2.3 DESIGNING FOR OWNER AND PET INTERACTION

2.3.1 EDUCATING THE CANINE OWNING COMMUNITY

Owner and pet interaction is the reason for having dog parks in the first place, and to make a dog park work, the owner must be made aware of the specific needs of his or her particular breed. The designer can either rely on the consumer to do his or her own research or provide it for them by including it within the product itself. One way to educate the owner is through signage, including information on what breeds are best suited for each activity. If a dog and its owner respond well to a particular piece of equipment, they are more likely to return. The worst thing that could happen is for an owner to become frustrated with a park because his or her pet does not respond to the activities provided. This is common among current dog parks that provide agility training equipment, which few dog breeds are interested in or even capable of doing.

2.3.2 MARKETING TOWARDS THE USER AND THEIR OWNER

Marketing towards the pet is easy since most dogs are happy just getting out of the house to run around and use up any stored energy from being closed in. The challenge for the designer is to create unique activities that are fun for the pet and the owner. By designing for the activity sets of individual breeds, someone who owns a retriever will enjoy taking their pet to a park that provides equipment that accentuates the specific abilities of a retriever. The same goes for other breeds, and, furthermore, research into the age, race, sex, and lifestyle of the owner can lead to other design considerations. For example, designing activities for elderly owners and their pets will be different than the activities designed for younger, more active owners and their pets.

CHAPTER 3: NEW DESIGN APPROACH

3.1 INTRODUCTION

The following design approach is intended to provide a detailed guideline on how to design dog park equipment that better represents current dog populations within the United States. Although all research and statistics in this text are for U.S. communities, the general design approach is not specific to one country over another. This is only one approach to solving the problem at hand and in no way is considered the only way to design better dog park equipment. By following these guidelines, the designer will have a better understanding of the problem and possible solutions.

3.2 PRODUCT FUNCTION RESEARCH

When designing a product that is part of a system, such as a dog park, the designer must look at the system as a whole to avoid creating products that do not fit into the system. The dog park is defined by the amenities provided in them, and these amenities make up the system. Each amenity in a dog park whether it is a watering hole or a piece of exercise equipment, has a particular function. After defining and documenting these functions, the designer can then begin to understand potential problems or areas for new product placement. Once areas for new product placement are found, the designer can begin researching what functions the new products must satisfy.

The purpose of this approach is to create new dog park equipment which includes functions that are lacking or missing all together in current dog parks. Investigating the individual needs of the target demographic will aid the designer in producing innovative, functional products.

3.3 RESEARCH GUIDELINE

3.3.1 DEMOGRAPHIC RESEARCH

The first step to any design process is knowing who you are designing for. In this case, there are two separate entities that must be defined, one being the owner and the other being the pet. In the United State, the American Veterinary Medical Association publishes a census on registered dog breed populations, as well as the age, gender and location of their owners. This publication also provides information on percentages of households that own dogs, number of dogs per dog-owning household, and total dog population by state. Using this information will allow the designer to better understand the potential market for any new product. For example, the most owned breed in the United States is the Labrador Retriever, and the state with the highest percentage of households that own dogs is West Virginia, so the designer can assume a product intended for a retriever will most likely have a market in West Virginia.

The use of this information can be very helpful, but, to avoid any wrong assumptions, someone designing a dog park should take a census of dogs living within the surrounding community. After defining the owner and pet demographic surrounding a current or future dog park, the designer can then begin researching the instinctual habits and activity sets of dogs within the community.

3.3.2 BREED INSTINCTS RESEARCH

Every dog breed was created for a particular purpose and carry with them instinctual habits they are genetically predisposed to doing. Although most breeds can adapt to any surrounding, they still require the ability to act out there instinctual needs of tracking a scent, retrieving game, or whatever they were originally intended for. The instinctual capacities of each breed can be found in the appendix of this text. After learning the instinctual habits of each breed, the designer can then formulate a set of functional activities that the target demographic will respond to. It is these activity sets that will be the basis for new dog park equipment.

3.3.3 ACTIVITY SET RESEARCH

Once the designer has created a list of activity sets, using the activity set charts in the appendix of this document, they can then apply these activities to potential product designs. For example, one of the most common activities among dogs is elimination behavior or the marking of territory through the elimination of their waists. A designer can take this behavior into consideration by creating a product that allows dogs to practice this behavior in a non destructive manner. By doing this, two functions are satisfied since dogs use this activity as a major part of their socializing with other dogs, and owners can avoid the nuisance of their pet “eliminating” on their rug.

There are many activities that cover a wider range of breeds than others, but the activities that are specific to fewer breeds will become more attractive to owners of said breeds. If a designer can create a product that allows a dog to show off his or her unique abilities, then success of the product is assumed to be greater. Owner and pet interaction

is crucial for dog park popularity, and showcasing this interaction is a great challenge to the designer.

3.3.4 AGE DEVELOPMENT RESEARCH

Not unlike children, how a puppy develops is affected by his or her environment and the individuals he or she comes in contact with. To develop into well-balanced puppies that fully realize their breed potential, they need the correct blend of social contact with other dogs and humans. Investigation into a puppy's behavioral development gives a greater understanding of the temperament of adult dogs and of the many problems which may arise in a dog's behavior.

The designer can not be held responsible for the failed upbringing of a dog. Instead, the designer can create products that allow owners to develop their pets' true potential. Dog parks are a great place for puppies to develop their physical and social behaviors. By providing amenities that aid in this development, puppies will grow into well-balanced adults that are more familiar with all that a dog park can provide.

3.3.5 SIZE AND WEIGHT VARIATION

The magnitude of size and weight among dogs has already been stressed in previous chapters, but knowing these variations is very important to the designer. When designing for humans one must take into consideration the size, strength, and skill of their demographic. The same goes when designing for dogs. For example, the Great Dane, one of the largest dog breeds, needs three square feet to lie comfortably. The designer

must consider all modes of locomotion a dog is capable of, and the abilities and clearances of each breed.

CHAPTER 4: CREATING THE MODERN DOG PARK

4.1 INTRODUCTION

The purpose of this chapter is to demonstrate the design approach as well as its effectiveness. The design process is divided into three phases: design research, design development and design communication. Each step, within the three phases, is given an explanation and in most cases will be illustrated with either a drawing or photograph.

4.1.1 COMPREHENSIVE PROBLEM STATEMENT

To design a product or system of products that promotes the health and well-being of dogs through exercise and play. As well as appeal to the consumer, this product should also satisfy all the needs and requirements of the user.

Key Factors to Consider

- Quick assembly
- Intuitive Form and Function
- Instinctive Canine Habits
- Owner and Pet Interaction
- Size Variation
- Durability
- Safety
- Easily Maintained

4.2 PHASE 1: DESIGN RESEARCH

4.2.1 DEMOGRAPHIC RESEARCH

In order to create new products that will represent the largest possible number of users, it was necessary to find which dogs were the most popular, or the most owned dogs within the United States. Using AKC breed registrations, it is possible to pinpoint which breeds make up the highest population of dogs. This project uses the top ten most owned breeds. Included in the top ten most owned breeds are Labrador Retrievers, Golden Retrievers, German Shepherds, Dachshunds, Beagles, Yorkshire Terriers, Poodles, Boxers, Chihuahuas, and Shih Tzus.

Dog Breeds – By Registered Population

	Number Registered	Rank
	2001	2001
Labrador Retriever	165,970	1
Golden Retriever	62,497	2
German Shepherd Dog	51,625	3
Dachshund	50,478	4
Beagle	50,419	5
Yorkshire Terrier	42,025	6
Poodle	40,550	7
Boxer	37,035	8
Chihuahua	36,627	9
Shih Tzu	33,240	10

4.2.2 ACTIVITY SET RESEARCH

Dogs, by nature are sporting animals; very few dogs can resist scouting around for a scent, chasing a rabbit, or showing excitement at the prospect of a brisk walk. Many sports actually revolve around the instinct to hunt and chase. Since most dog parks are placed in urban environments where owners have little time to train their pets, this project

is intended to target the instinctual habits of dogs. By creating products that require little or no training for the pet to become acquainted with the function of the equipment, it is more likely that owners will be motivated to take their pets to dog parks for exercise and interaction with other dogs in their prospective communities.

Common activity sets among the top ten breeds include: running, swimming, retrieving, guide and rescue, companionship, digging, trailing, guarding, herding, tracking, tricks or performing, drug detection, and baiting. Although these are activities are common to the top ten breeds, they are also used by other breeds as well. So, by designing for these activity sets, the designer is also creating products that represent an even larger population.

4.2.3 SIZE AND WEIGHT VARIATION

The weight and height of domestic dogs vary dramatically from one breed to the next, perhaps more than any other species in the animal kingdom. The Chihuahua, standing only eight inches high and weighing less than eight pounds, is dwarfed when standing next to the Great Dane, which can be as tall as thirty two inches and weigh over one hundred and fifty five pounds. Although the size difference among the top ten breeds is not as dramatic, it is still cause for design consideration. The following table shows size and weight standards of full grown adults in the top ten, most owned breeds.

Size and Weight Variation among the Top 10 Breeds

1. Labrador Retriever
   21-22.5 in., 55-66 lb.
2. Golden Retriever
   20-24 in., 55-69.5 lb.
3. German Shepherd
   22-25.5 in., 48.6-88.3 lb.
4. Dachshund
   10-14.5 in., 7-15.5 lb.
5. Beagle
   13-16 in., 33-44 lb.
6. Yorkshire Terrier
   8 in., 6.7 lb. or less
7. Poodle
   11-23.5 in., 15.5-48.5 lb.
8. Boxer
   21-25 in., 55-66 lb.
9. Chihuahua
   6.5-8 in., 2-7.5 lb.
10. Shih Tzu
   10 in., 10-17.5 lb.

4.2.4 MOVEMENT, GAIT AND DEXTERITY

The differences in movement among breeds has been discussed in earlier chapters but will be examined further within the top ten breeds. For example, one would assume that the Dachshund, with its short legs, would not have a very good jumping ability. Another misconception of movements common to the top ten breeds is the swimming ability of the poodle. These misconceptions can be avoided by researching the instinctual movements of each breed in the target demographic.

Gait can be a major reason why an owner was drawn to a particular breed in the first place and is considered an aesthetic characteristic among most breeds. In order to develop a dog's gait, it must be allowed to play and exercise without being leashed or tied up. The constant resistance to a leash or chain can lead to undesired gait and morphology in all of the top ten breeds.

What dogs lack in dexterity with their paws, they make up for by the efficient use of their mouths. Behaviorally, the mouth is an important part of the body. Its strength is

tremendous; not only can dogs crack enormous bones, kill animals, and carry objects but they can support the whole weight of their bodies by their mouths.

The quickest way to get owners to take their pets to a dog park is to provide activities that showcase their pet's abilities. Giving a dog a reason to run faster, jump higher or climb higher will make a day at the park fun for everyone involved. The following is a list of abilities common among the top ten breeds.

Movement, Gait and Dexterity Considerations among the Top Ten Breeds

- Labs and Golden Retrievers are very dexterous and love to practice grabbing or digging for things with their paws.
- Dachshunds and Beagles are experienced diggers and love a challenging hunt above or below ground.
- German Shepherds and Boxers love to show off their speed and gait and require lots of space to really let loose.
- Dachshunds, Beagles, Yorkies, Chihuahuas and Shih Tzus are very territorial dogs and love to perch, like a cat, on elevated surfaces.
- Most of the top ten breeds have the ability to instinctually retrieve and will take part in any game of fetch.
- German Shepherds and Boxers are included in the baiting breed and love to practice tugging and bringing down large loads.
- Yorkies and Beagles are experienced ratters and love to chase vermin or anything in site, for that matter.

4.2.5 BRAINSTORMING

After defining the target demographic and the instinctual activities they enjoy, I began brainstorming potential functions that need to be satisfied. From the research, I found that, other than elimination behavior, the most common activity among the top ten breeds is hunting and retrieving. Other common activities such as baiting and digging where also considered. Keeping these activities in mind, I began sketching ideas produced during brainstorming sessions with other design students.

4.2.6 PRELIMINARY IDEA SKETCHING

The following figures are examples of idea sketches produced after brainstorming sessions with other design students. In Figure 1 (below) I have sketched possible activities for the baiting and tracking breeds. The product at the top of Figure 1 would be set into the ground with stakes and is intended to give resistance against a baiting dog's

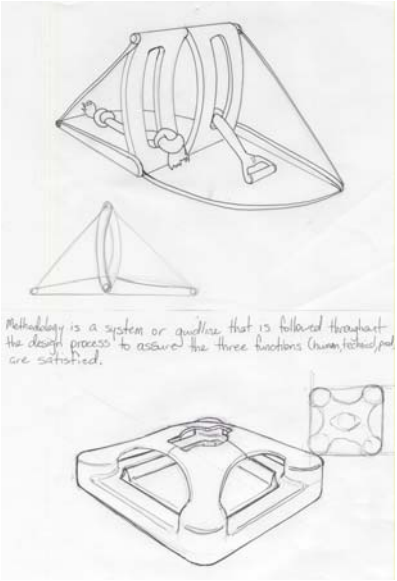

Figure 1 – Idea Sketch 1 and 2

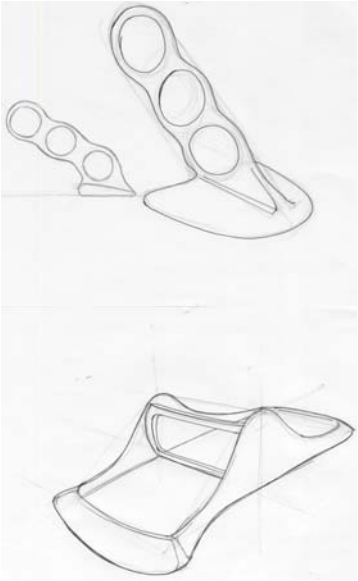

Figure 2 - Idea Sketch 3 and 4

tug. The product below imitates a scenario of wild game in their den so dogs such as beagles or dachshund can practice the instinctual habit of digging. In Figure 2 (above) activities conducive to performing and retrieving breeds are depicted. The top sketch in Figure 2 is an example of a hurdle that allows for varying abilities. The sketch below is a product that allows owners of retrievers to interact with their pets by throwing a toy into a basket that the dog must find by digging. In Figure 3 (below), I have sketched products that might be attractive to territorial dominant breeds as well as ratters. The sketch at the top of Figure 3 is a product that would allow dogs to climb and perch higher than other dogs around them. Below that is a sketch of a product that imitates scurrying vermin through the random spraying of water.

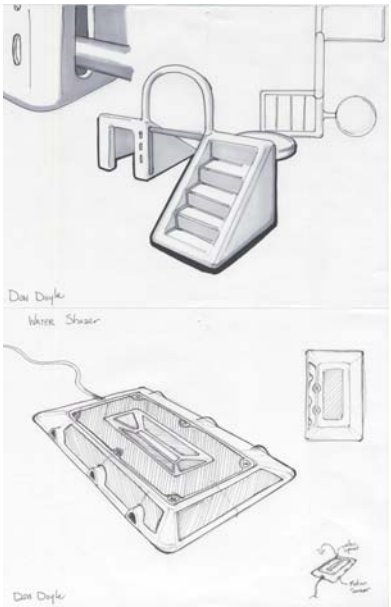

Figure 3 - Idea Sketch 5 and 6

4.2.7 SIX CONCEPTS

After brainstorming and sketching initial ideas, the next step was to develop the ideas further and come with concepts for potential products. The following are the six concepts that were picked by my instructor and sponsor.

Concept one, shown in Figure 4 (below), is derived from preliminary sketches in Figure 1. It is intended to exploit the skills and habits of the baiting breeds which are represented in the top ten breeds by the German Shepherd and the Boxer. This product would allow these breeds to practice their instinctual need to bring down large game or dangerous assailants in non-destructive play.

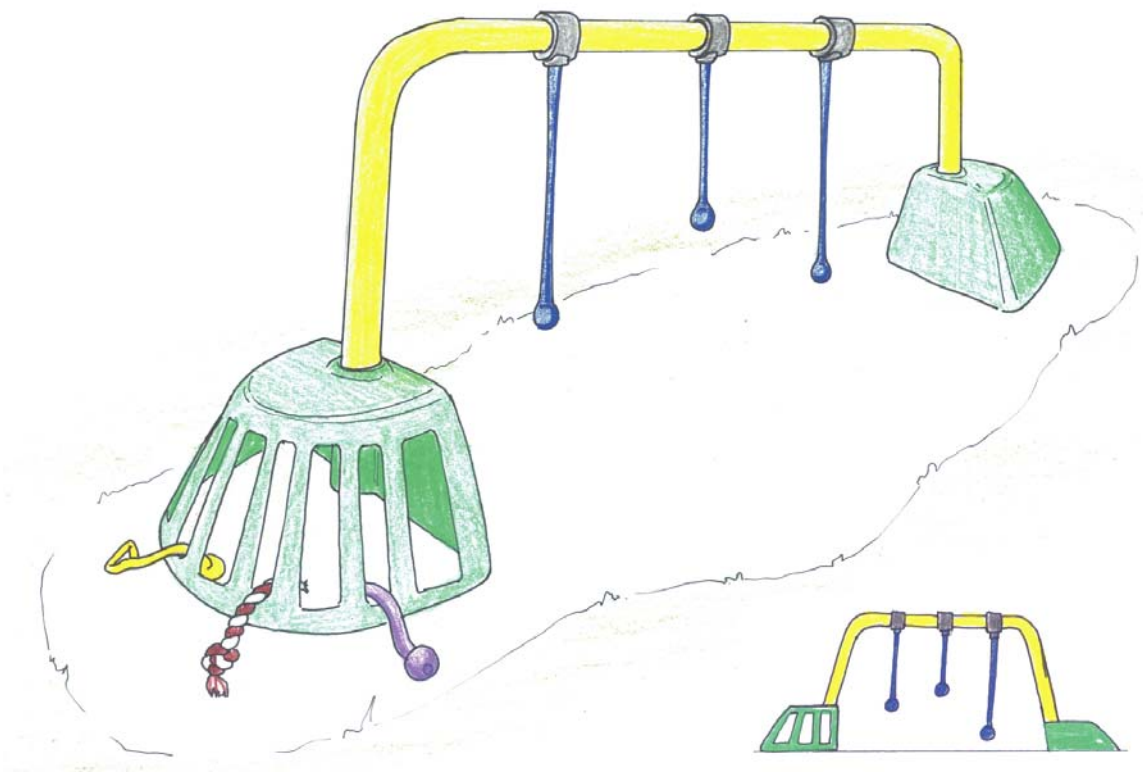

Figure 4 - Concept 1

Concept two, shown in Figure 5 (below), is a system of perches at varying heights that create a way for dogs that enjoy climbing and showing their dominance over other dogs to play. This product is designed with Dachshunds, Beagles, Yorkies, Poodles, Chihuahuas, and Shih Tzus in mind. Shih Tzus, especially, enjoy this activity, borrowing this habit from cats. This product also promotes owner and pet interaction by allowing children to play the same games their pets enjoy. This concept would most likely be made with plastic through a rotational molding process.

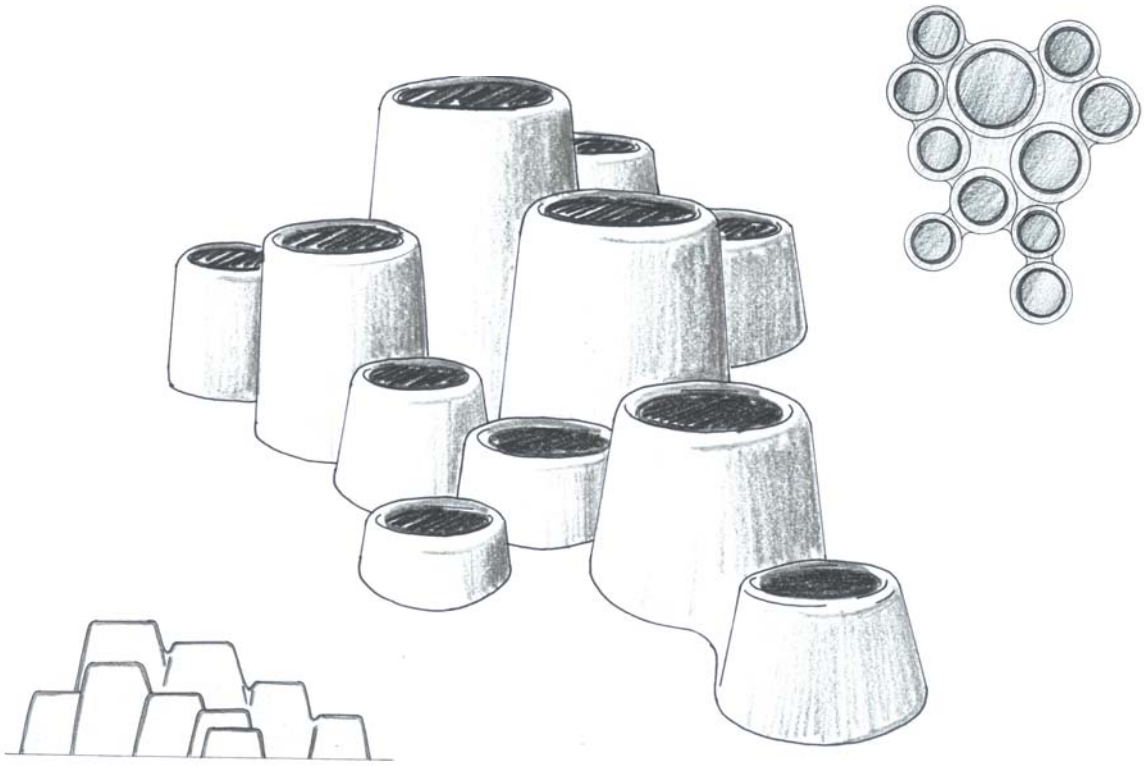

Figure 5 - Concept 2

The most common behavior of all dogs is what is called elimination behavior, or the marking of territory. This activity is a major part of how a dog communicates with other dogs. Concept 3, shown in Figure 6 (below), is designed to give dogs an area to mark their territory in a non-destructive manner. Although it isn't exactly known why dogs prefer marking vertical objects, it is assumed that they are trying to place a scent where winds will spread it further than if they marked the ground. It is my assumption that they associate with the objects themselves, and, by marking them, they become a possession of the dog. Another theory is that dogs use this behavior as a messaging service, much like the postal service we use.

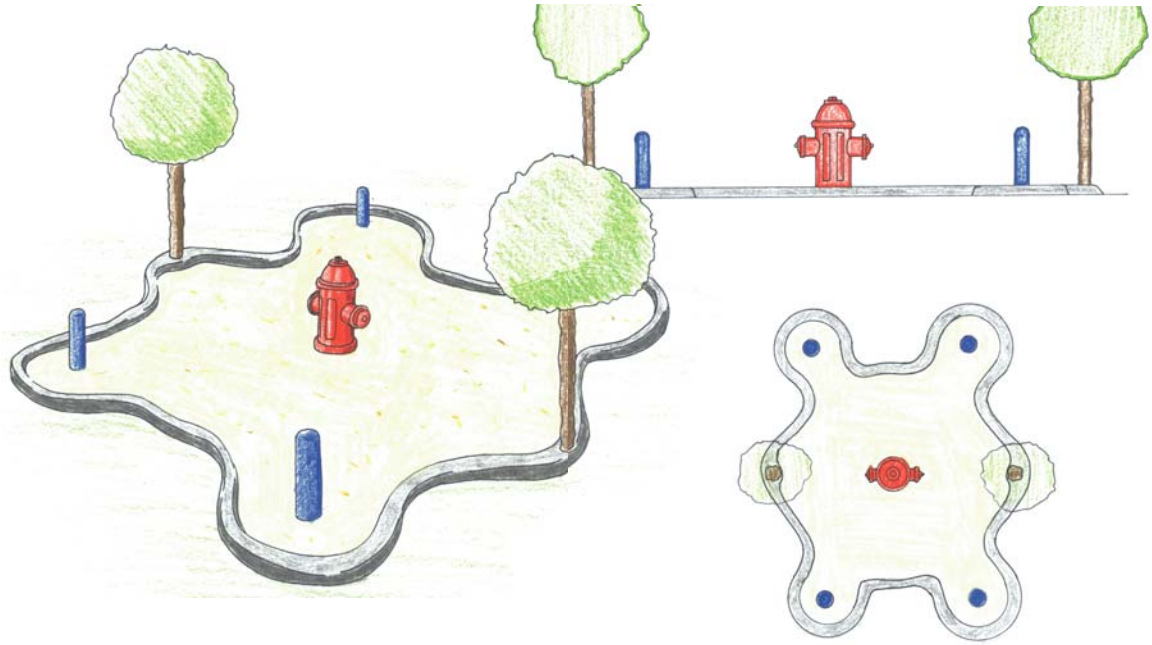

Figure 6 - Concept 3

The following concept is an activity that relates to the performing breeds such as the poodle or the German Shepherd. These breeds demand training and having their intelligence, as well as athletic ability, challenged daily. This concept allows for varying size and ability as shown in Figure 7 (below). Although this product, unlike the other concepts, will require substantial training, it is a good way to enhance owner and pet interaction between the breeds that respond to it and their owners.

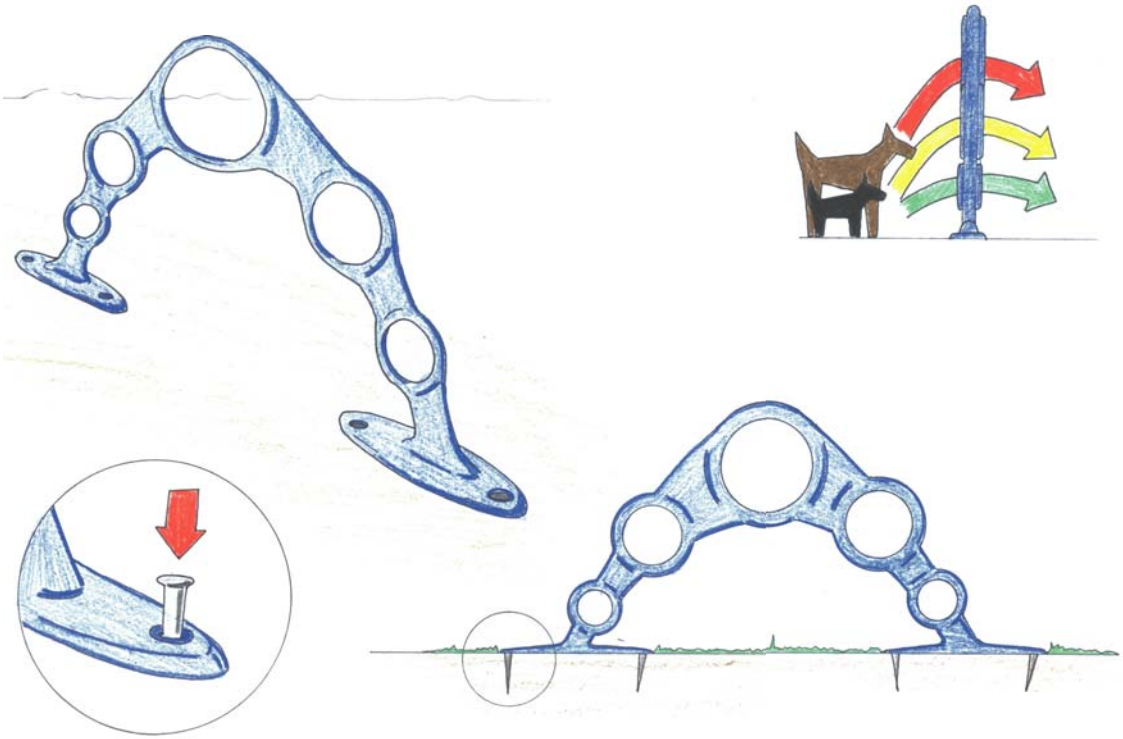

Figure 7 - Concept 4

Concept five, shown below in Figure 8, comes from the idea sketch in Figure 3. By using motion sensor technology, this product sprays water in random directions. The streams of water are intended to imitate vermin or small game such as birds. Breads such as Beagles and Yorkies usually can not avoid chasing anything that resembles a rat, rabbit, or bird. This concept is intended to be sold in retail stores and set up in the backyard. The product uses a garden hose attachment as shown in Figure 8.

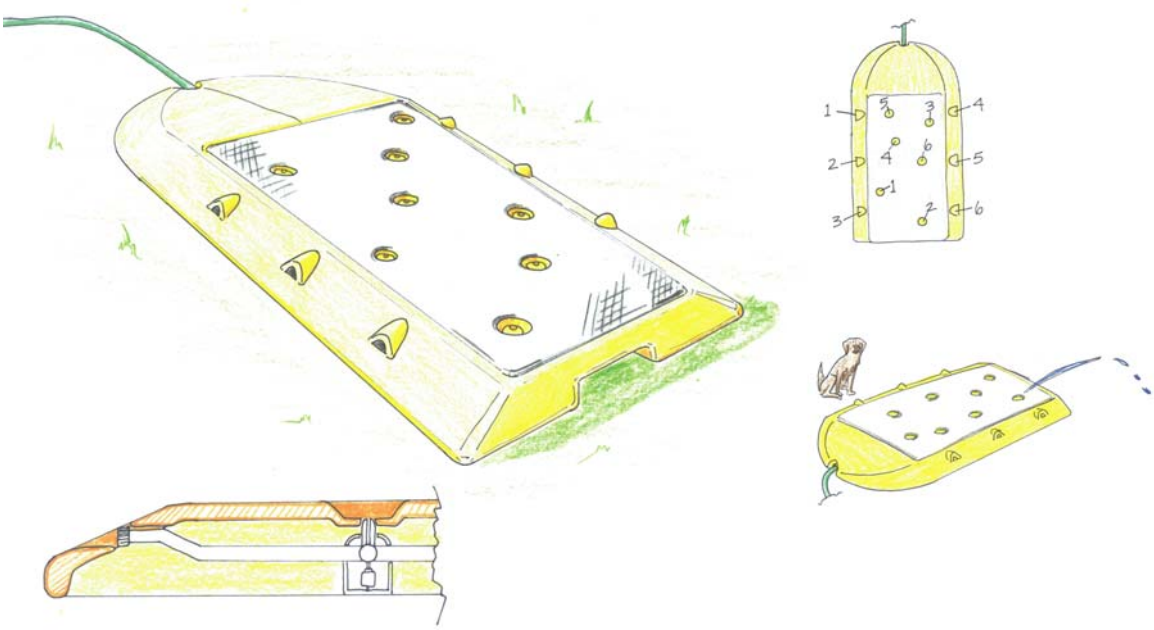

Figure 8 - Concept 5

Representing the retrieving breeds such as Labs, Golden Retrievers and Poodles, concept 6 creates a game of fetch with the added twist of having to dig in order to retrieve the toy thrown in the basket. In Figure 9 (below), you can see that when the toy is trapped in the basket, it can only be accessed when the dog digs a hole for the ball to drop into. In this concept, intended to be a product set up in the backyard, you can see how the sand would be reset by the owner after the dog has created a hole in the sand.

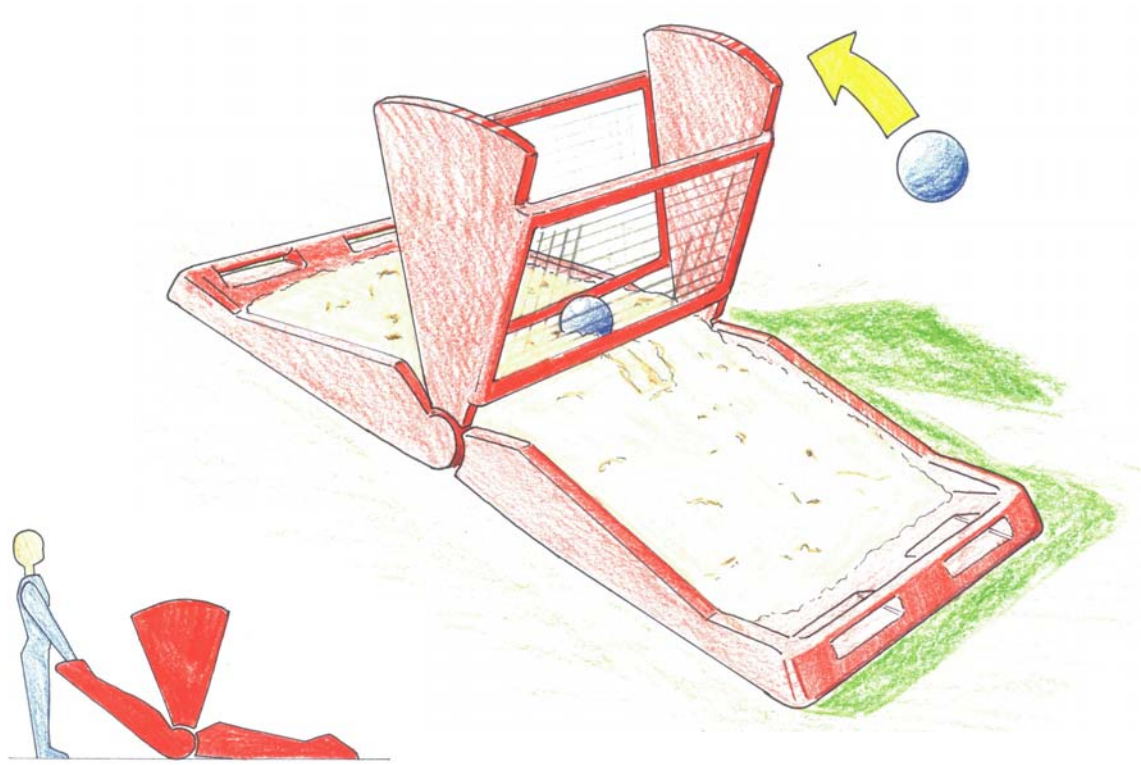

Figure 9 - Concept 6

4.3 PHASE 2: DESIGN DEVELOPMENT

4.3.1 THIRTY-FIVE SKETCHES

After presenting the six concepts to my instructor and sponsor, I began developing them further. In the following figures are design modifications and alternatives created after receiving criticism and new ideas. Other design considerations leading to these modifications are: production materials already used by PlayCore, the market in which these products will be placed, and environmental wear considerations.

In Figure 10 (on next page), I have sketched out possible alternatives for concept 6, which from this point forward will be called DigiT. One major concern with the original DigiT concept was with overall weight of the sand needed for a product designed to be a consumer product, so I worked on ways of either reducing the amount of sand needed as well as removing the sand altogether. One alternative would be to create a track or conveyer that would still force the dog to imitate the act of digging in order to retrieve the toy. Another way to solve this problem was to create a conical shape that allowed the sand to replenish itself so that the owner could set up the product without needing to maintain the placement of the sand.

After working through these alternatives and discussing them with my sponsor, it was determined that this product would most likely be placed in a commercial market. In a commercial dog park, this product would need to be exceedingly more durable and require little or no maintenance.

Figure 10 - Concept Alternatives 1

The original concept number 2, which will be called ClimbiT from this point forward, was a massive rotational molded part that would be very expensive to make considering its size. Using ideas and criticism from my sponsor, I worked on ways of modularizing the product to reduce tooling costs as much as possible. In Figure 11 (on the following page), you can see that I also experimented with different production materials. Although I wanted to satisfy the needs of my sponsor, I did not want to lose the layout depicted in the original concept. After working through these alternatives, I decided that the best solution would be to design a roto-molded part that is modular in design that could be assembled to mirror the original concept layout.

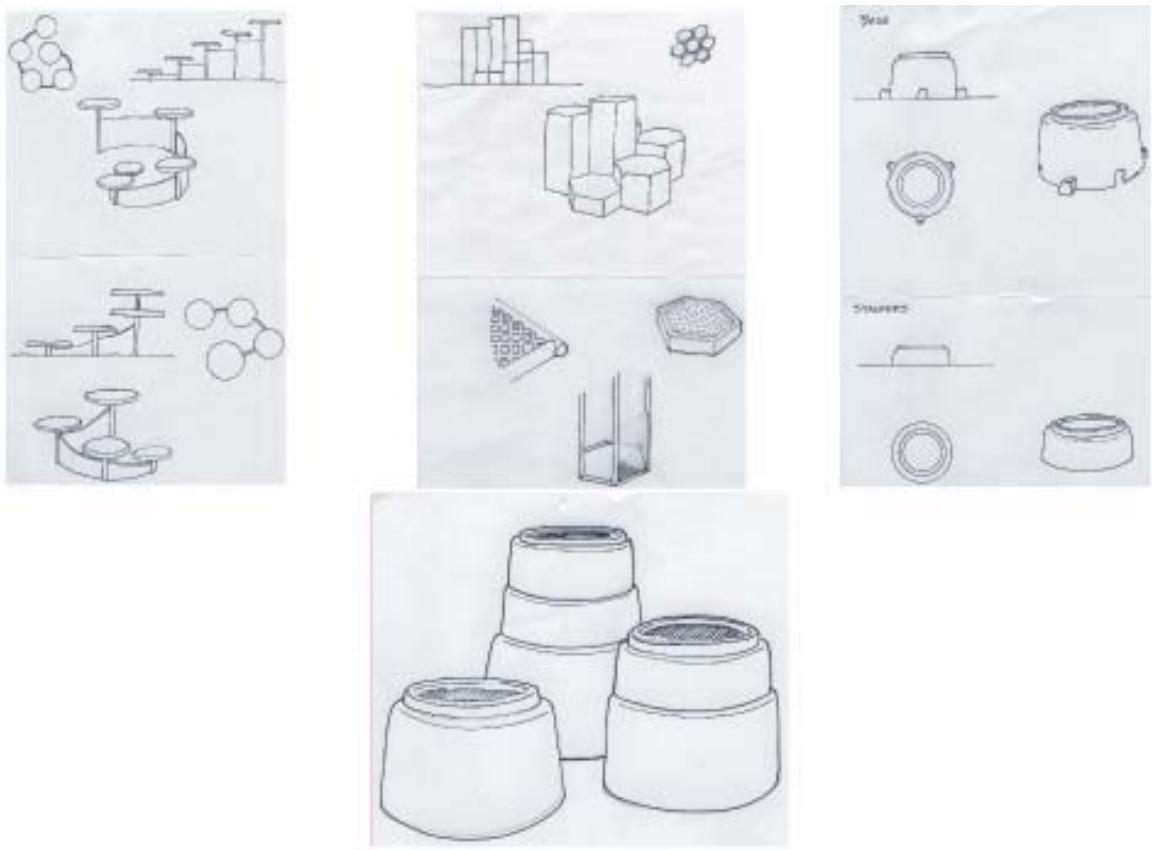

Figure 11 - Concept Alternatives 2

At this point it has been determined that all products in this project would be best suited for a commercial dog park and not as retail products. With that said, concept 1, which will be called SwingiT from this point on, needed little change. Still, I wasn't completely satisfied with the original concept and wanted to explore alternative layouts of the product. I also wanted to figure out the best way to assemble the tugging toys since they would need to be replaced frequently.

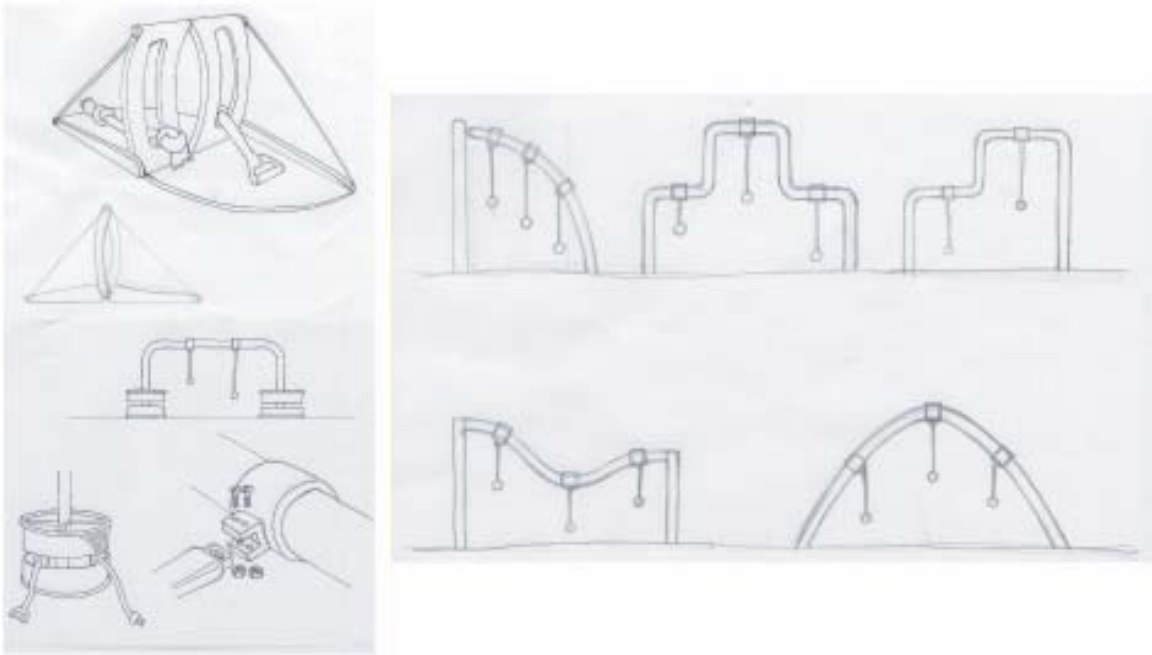

Figure 12 - Concept Alternatives 3

Since the original concept for concept 4, now called JumpiT, was not intended for commercial dog parks, several changes needed to be made on the material and assembly of the product. Dogs can be very destructive creatures, and, added with the forces of nature, this product needs to be very durable. As you can see in Figure 13 (on next page), I tried to discover ways of installing this product in a more permanent manner. I also wanted to match the style of other products that might be assembled nearby.

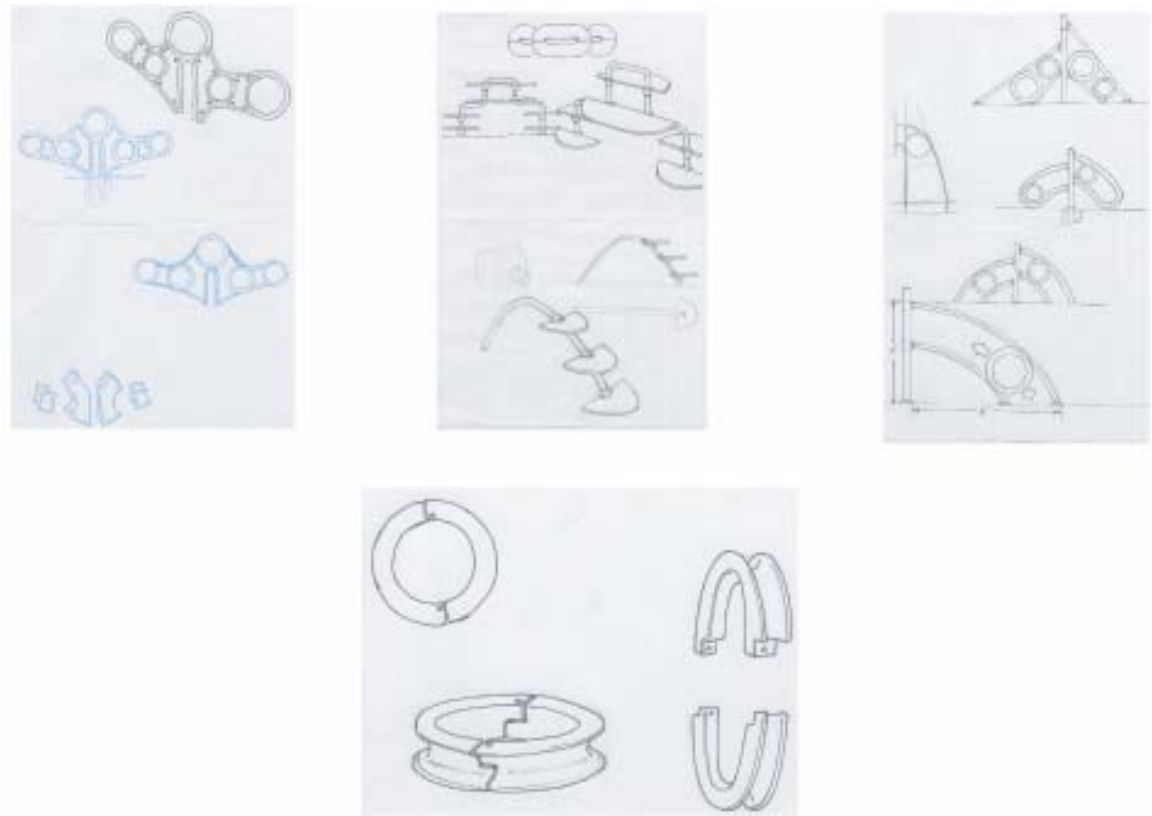

Figure 13 - Concept Alternatives 4

Concept 5, now referred to as GetiT, was also designed for at home use in the original concept. The original concept involved a hose attachment that may not be available or best for a commercial dog park. To remedy this problem I developed an alternative to the hose attachment. By designing a product that uses a sprinkler attachment, I changed the original design so that no mechanical or electrical assemblies are needed. The use of a sprinkler powered system will also allow the water supply to be timed and turned off automatically to avoid any unnecessary waste.

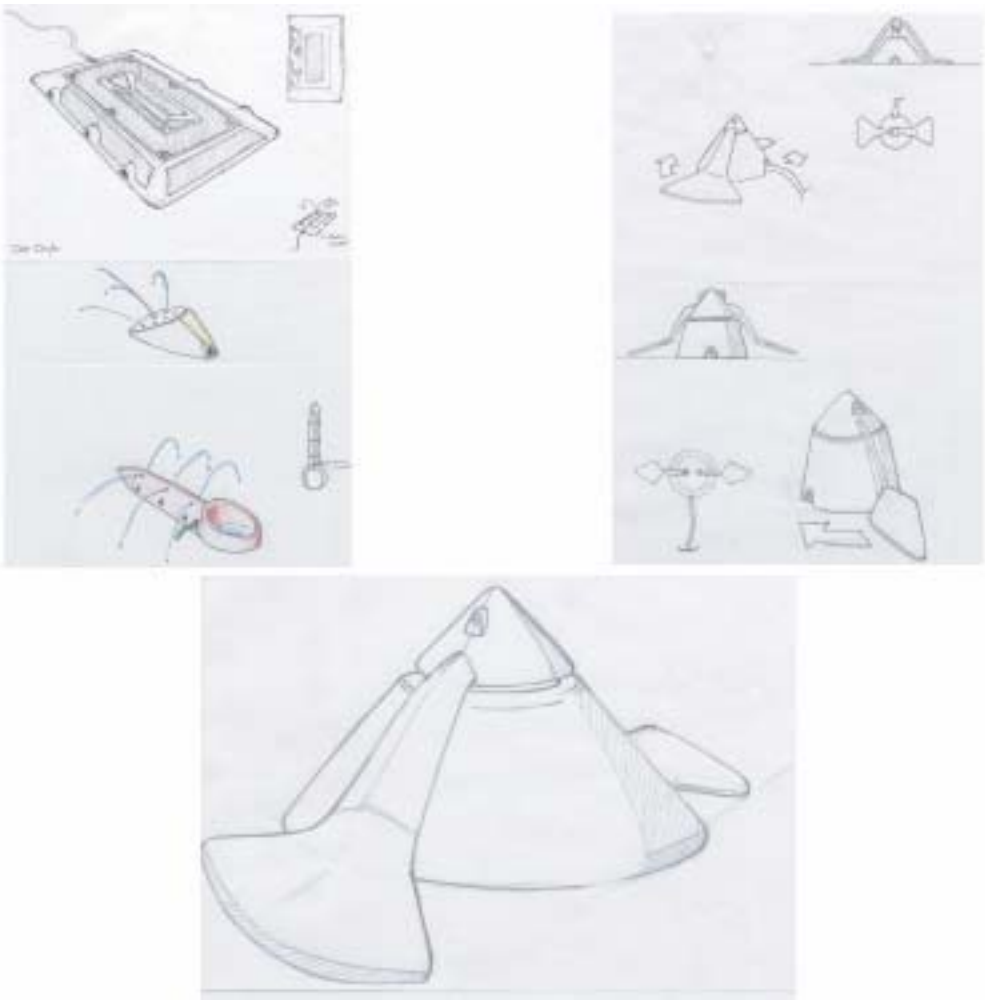

Figure 14 - Concept Alternatives 5

Few alternatives or modifications were necessary for concept 3, which is called MarkiT from this point on, since most of the materials and assemblies are already used by PlayCore. In Figure 15 (on next page) I worked on ways of reducing the overall cost of producing and assembling MarkiT. By borrowing products already used by PlayCore in their commercial playgrounds for children, I explored ways of applying them to dog parks.

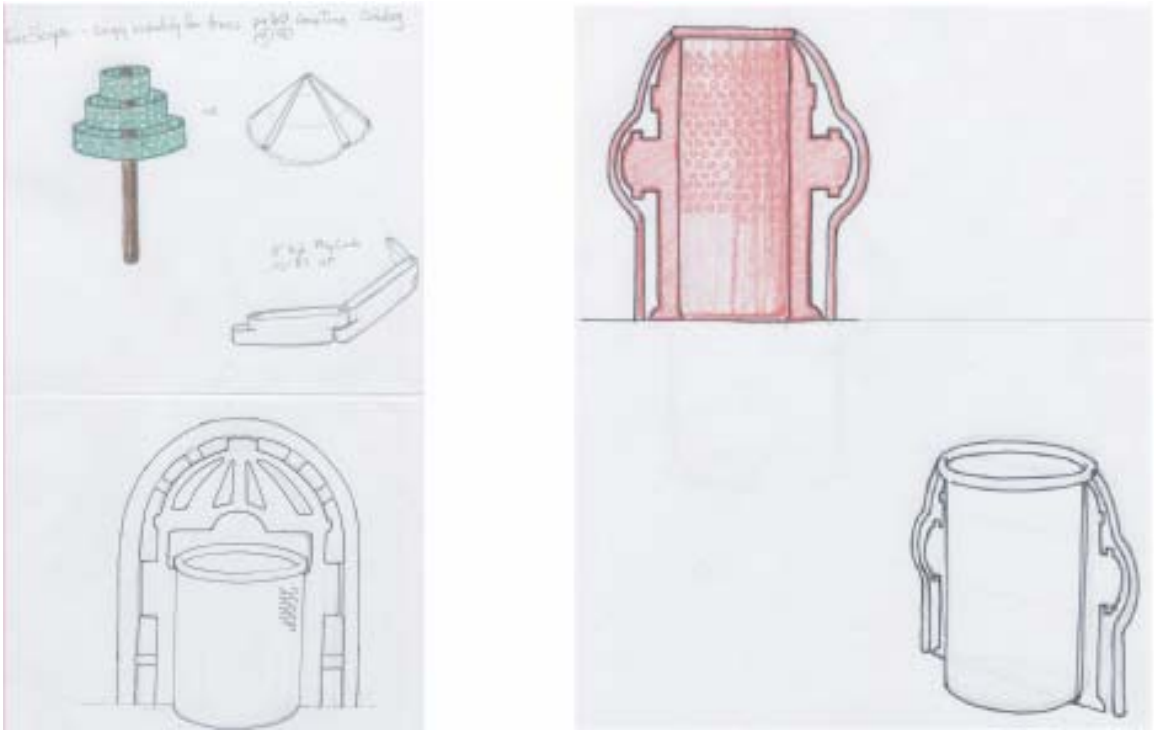

Figure 15 - Concept Alternatives 6

After presenting the six concepts to my instructor and sponsor, it was decided that concept 1 should be split into two separate products, one being SwingiT and the other being a product called TugiT. Even though both products are similar in activity, they differed in function. By designing a product that allowed smaller dogs within the baiting breeds to participate, a larger population of dogs is represented. This brought me back to the original idea sketch, which only needed to be modified to fit into a commercial market. In Figure16 (on next page) you can see that I have developed a way the product can be set into the ground, using concrete, in order to increase its durability.

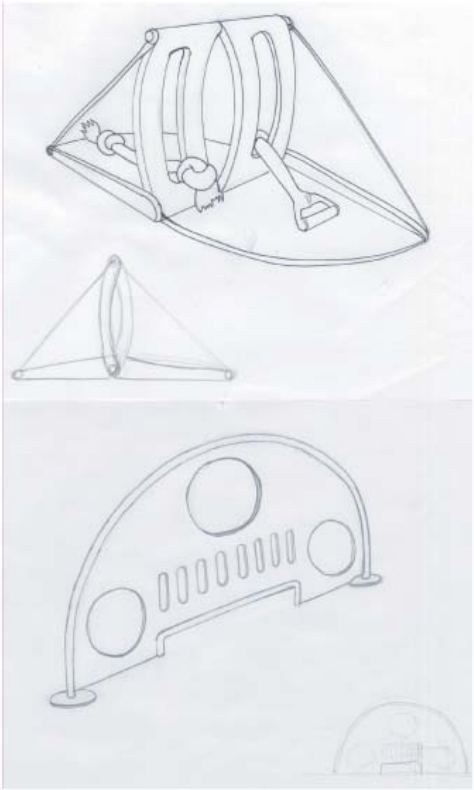

Figure 16 - Concept Alternatives 7

4.3.2 PERFORMANCE CRITERIA

The purpose of performance criteria is to define a set of parameters that a product must satisfy in order to be deemed a well designed product. Performance criteria are separated into three sections: the user function, technical function and production function. In this project the user function has been divided further into human and canine performance. Once the performance criterion for each product is established I can then measure the effectiveness of my design.

Included in each user function is: the type of user, location of use, color scheme, signage, styling, weight, size and maintenance. Included in the technical function is: a part list and technical parameters of each part, environmental interaction, user interaction

and safety. Included in the production function is: distribution, packaging, shipping weight, box dimensions, marketing and manufacturing solutions.

Performance Criteria for DigiT

		PARAMETERS	CRITERIA
HUMAN PERFORMANCE	SOCIAL/ECONOMIC	Type of Users:	
		Gender	Any (72.6% female)
		Age Range	Any (18 to 65 make up the majority of primary owners)
		Activity Level	Able to handle a pet in an outdoor environment
		Location of Use	Outdoor Environment
	CULTURAL/AESTHETIC	Color Scheme	Inviting vibrant -vs- Suttle earth tones
		Signage	where intuitive design lacks, there should be clear instructional signage
		Styling	only slight abstraction from intuitive shapes condusive to the function of the product
	PRACTICAL PHYSIOLOGICAL	Weight	Modular design should allow assembly by no more than two persons
		Size	Modular design should allow assembly by no more than two persons
		Maintenance	Minimul to No maintenance for the life of the product
CANINE PERFORMANCE	SOCIAL/ECONOMIC	Type of Users:	
		Breed	Retrievers and Buroughing breeds (all breeds have the ability to retrieve and burough)
		Age Range	puppy to active adult
		Activity Level	Active retrievers and or diggers (product is meant to alliviate unwanted digging)
		Location of Use	Outdoor Environment
	CULTURAL/AESTHETIC	Color Scheme	Inviting vibrant -vs- Suttle earth tones
		Signage	
		Styling	Design must consider the size and motions of a buroughing dog
	PRACTICAL PHYSIOLOGICAL	Weight	Design must allow for easy assembly but also be heavy enough to remain stationary
		Size	5' or Larger in Diameter
		Maintenance	

Table 1 - DigiT User Function Performance Criteria

		PARAMETERS	CRITERIA
TECHNICAL PERFORMANCE	DIRECT TECHNICAL	Sandbox	
		Capacity (sand by lbs.)	50 lbs. or more
		Material	Plastic is preferred
		Shape	Must allow 360 degrees of access
		Diameter	5' or more
		Surfacing	must be non-slip surface with no openings for claw enclosure
		Basket	
		Capacity (area vs height)	must allow at least a ball 9.5" in diameter to pass through
		Material	Plastic is preferred
		Shape	must allow at least a ball 9.5" in diameter to pass through
		Visibility	ball must remain visible to the dog and owner at all times
	INDIRECT TECHNICAL	Environment Interaction	All materials must work well with sand, water, and all other outdoor elements
		User Interaction	All materials must be non-toxic harmless to canines and humans
		Safety	Product must comply with existing ASTM standards

Table 2 - DigiT Technical Function P.C.

		PARAMETERS	CRITERIA
PRODUCTION PERFORMANCE	PLANNING	Distribution	PlayCore Direct shipping
		Packaging	undetermined
		Shipping weight	undetermined
		Box Dimensions	undetermined
		Marketing	PlayCore, GameTime, ParkStructures catalog and or website
	MANUFACTURING	Basket	Rotomolded
		Braces	Rotomolded or C&C'd HDPE
		Sandbox	Rotomolded or prefab curbing (using existing ground)

Table 3 - DigiT Production Function P.C.

Performance Criteria for ClimbiT

		PARAMETERS	CRITERIA
HUMAN PERFORMANCE	SOCIAL/ECONOMIC	Type of Users:	
		Gender	Any (72.6% female)
		Age Range	Any (18 to 65 make up the majority of primary owners)
		Activity Level	Able to handle a pet in an outdoor environment
		Location of Use	Outdoor Environment
	CULTURAL/AESTHETIC	Color Scheme	Inviting vibrant -vs.- Subtle earth tones
		Signage	where intuitive design lacks, there should be clear instructional signage
		Styling	only slight abstraction from intuitive shapes conducive to the function of the product
	PRACTICAL PHYSIOLOGICAL	Weight	Modular design should allow assembly by no more than two persons
		Size	Modular design should allow assembly by no more than two persons
		Maintenance	Minimal to No maintenance for the life of the product
CANINE PERFORMANCE	SOCIAL/ECONOMIC	Type of Users:	
		Breed	Small to Mid-size breeds (all breeds have the ability to climb)
		Age Range	puppy to active adult
		Activity Level	Active climbers and breeds known for territorial dominance
		Location of Use	Outdoor Environment
	CULTURAL/AESTHETIC	Color Scheme	Inviting vibrant -vs.- Subtle earth tones
		Signage	
		Styling	Design must consider the size and ability of all breeds
	PRACTICAL PHYSIOLOGICAL	Weight	Design must allow for easy assembly but also be heavy enough to remain stationary
		Size	3' or Larger in Diameter
		Maintenance	

Table 4 - ClimbiT User Function P.C.

		PARAMETERS	CRITERIA
TECHNICAL PERFORMANCE	DIRECT TECHNICAL	Base	
		Material	Plastic is preferred
		Shape	Must allow for 360 degrees of access
		Diameter	3' or larger
		Surfacing	Must be nonskid surface with no openings for possible claw entrapment
		Stacker	
		Material	Plastic is preferred
		Shape	Must allow for 360 degrees of access
		Diameter	3' or larger
		Surfacing	Must be nonskid surface with no openings for possible claw entrapment
	INDIRECT TECHNICAL	Environment Interaction	All materials must work well with all outdoor elements
		User Interaction	All materials must be non-toxic harmless to canines and humans
		Safety	Product must comply with existing ASTM standards

Table 5 - ClimbiT Technical Function P.C.

		PARAMETERS	CRITERIA
PRODUCTION PERFORMANCE	PLANNING	Distribution	PlayCore Direct shipping
		Packaging	undetermined
		Shipping weight	undetermined
		Box Dimensions	undetermined
		Marketing	PlayCore, GameTime, ParkStructures catalog and or website
	MANUFACTURING	Base	Rotomolded Plastic
		Stacker	Rotomolded Plastic

Table 6 - ClimbiT Production Function P.C.

Performance Criteria for SwingiT

		PARAMETERS	CRITERIA
HUMAN PERFORMANCE	SOCIAL/ECONOMIC	Type of Users:	
		Gender	Any (72.6% female)
		Age Range	Any (18 to 65 make up the majority of primary owners)
		Activity Level	Able to handle a pet in an outdoor environment
		Location of Use	Outdoor Environment
	CULTURAL/AESTHETIC	Color Scheme	Inviting vibrant -vs.- Subtle earth tones
		Signage	where intuitive design lacks, there should be clear instructional signage
		Styling	only slight abstraction from intuitive shapes conducive to the function of the product
	PRACTICAL PHYSIOLOGICAL	Weight	Design should allow assembly by no more than two persons
		Size	Design should allow assembly by no more than two persons
		Maintenance	Minimal to No maintenance for the life of the product
CANINE PERFORMANCE	SOCIAL/ECONOMIC	Type of Users:	
		Breed	Baiting breeds (all breeds have the ability to tug and pull)
		Age Range	puppy to active adult
		Activity Level	Active baiting breeds (this product is meant to alleviate the need to tug or chew)
		Location of Use	Outdoor Environment
	CULTURAL/AESTHETIC	Color Scheme	Inviting vibrant -vs.- Subtle earth tones
		Signage	
		Styling	Design must consider the size and ability of all breeds
	PRACTICAL PHYSIOLOGICAL	Weight	Design must allow for easy assembly but also be heavy enough to remain stationary
		Size	8' or less (height), 16' or less in diameter (total area)
		Maintenance	

Table 7 - SwingiT User Function P.C.

		PARAMETERS	CRITERIA
TECHNICAL PERFORMANCE	DIRECT TECHNICAL	Cross Bar	
		Material	5" metal tubing
		Shape	
		Diameter	5"
		Surfacing	
		Clamps	
		Material	Cast Aluminum or Steel
		Shape	
		Diameter	
		Surfacing	
		Swings	
		Material	metal cable w/ durable, flexible, overmolded plastic
		Shape	
		Length	2' to 7'
		Surfacing	Smooth nonabrasive texture
	INDIRECT TECHNICAL	Environment Interaction	All materials must work well with all outdoor elements
		User Interaction	All materials must be non-toxic harmless to canines and humans
		Safety	Product must comply with existing ASTM standards

Table 8 - SwingiT Technical Function P.C.

		PARAMETERS	CRITERIA
PRODUCTION PERFORMANCE	PLANNING	Distribution	PlayCore Direct shipping
		Packaging	undetermined
		Shipping weight	undetermined
		Box Dimensions	undetermined
		Marketing	PlayCore, GameTime, ParkStructures catalog and or website
	MANUFACTURING	Cross Bar	5" metal tubing
		Clamps	cast alluminum or steel
		Swings	durable, flexable plastice molded over braded metal cable

Table 9 - SwingiT Production Function P.C.

Performance Criteria for JumpiT

		PARAMETERS	CRITERIA
HUMAN PERFORMANCE	SOCIAL/ECONOMIC	Type of Users:	
		Gender	Any (72.6% female)
		Age Range	Any (18 to 65 make up the majority of primary owners)
		Activity Level	Able to handle a pet in an outdoor environment
		Location of Use	Outdoor Environment
	CULTURAL/AESTHETIC	Color Scheme	Inviting vibrant -vs.- Subtle earth tones
		Signage	where intuitive design lacks, there should be clear instructional signage
		Styling	only slight abstraction from intuitive shapes conducive to the function of the product
	PRACTICAL PHYSIOLOGICAL	Weight	Design should allow assembly by no more than two persons
		Size	Design should allow assembly by no more than two persons
		Maintenance	Minimal to No maintenance for the life of the product
CANINE PERFORMANCE	SOCIAL/ECONOMIC	Type of Users:	
		Breed	All breeds
		Age Range	puppy to active adult
		Activity Level	All active levels benefit from exercise and training
		Location of Use	Outdoor Environment
	CULTURAL/AESTHETIC	Color Scheme	Inviting vibrant -vs.- Subtle earth tones
		Signage	
		Styling	Design must consider the size and ability of all breeds
	PRACTICAL PHYSIOLOGICAL	Weight	Design must allow for easy assembly but also be heavy enough to remain stationary
		Size	6' or less (height), 12' or less in diameter (total area)
		Maintenance	

Table 10 - JumpiT User Function P.C.

		PARAMETERS	CRITERIA
TECHNICAL PERFORMANCE	DIRECT TECHNICAL	Base	
		Material	5" metal tubing
		Shape	
		Diameter	5"
		Surfacing	
		Runners	
		Material	3" metal tubing
		Shape	Must be parallel to each other at all points
		Diameter	3"
		Surfacing	
		Adjustable Hurdle	
		Material	Rotomolded Plastic
		Shape	Circular
		Diameter	3' or larger
		Surfacing	Smooth nonabrasive texture
	INDIRECT TECHNICAL	Environment Interaction	All materials must work well with all outdoor elements
		User Interaction	All materials must be non-toxic harmless to canines and humans
		Safety	Product must comply with existing ASTM standards

Table 11 - JumpiT Technical Function P.C.

		PARAMETERS	CRITERIA
PRODUCTION PERFORMANCE	PLANNING	Distribution	PlayCore Direct shipping
		Packaging	undetermined
		Shipping weight	undetermined
		Box Dimensions	undetermined
		Marketing	PlayCore, GameTime, ParkStructures catalog and or website
	MANUFACTURING	Base	5" capped metal tubing
		Runners	3" welded metal tubing
		Adjustable hurdle	Rotomolded Plastic

Table 12 - JumpiT Production Function P.C.

Performance Criteria for MarkiT

		PARAMETERS	CRITERIA
HUMAN PERFORMANCE	SOCIAL/ECONOMIC	Type of Users:	
		Gender	Any (72.6% female)
		Age Range	Any (18 to 65 make up the majority of primary owners)
		Activity Level	Able to handle a pet in an outdoor environment
		Location of Use	Outdoor Environment
	CULTURAL/AESTHETIC	Color Scheme	Inviting vibrant -vs.- Subtle earth tones
		Signage	where intuitive design lacks, there should be clear instructional signage
		Styling	only slight abstraction from intuitive shapes conducive to the function of the product
	PRACTICAL PHYSIOLOGICAL	Weight	Design should allow assembly by no more than two persons
		Size	Design should allow assembly by no more than two persons
		Maintenance	Regular maintenance is required for sanitary reasons
			-must have access to trash recepticals
CANINE PERFORMANCE	SOCIAL/ECONOMIC	Type of Users:	
		Breed	All Breeds (primarily designed for male dogs)
		Age Range	puppy to active adult
		Activity Level	All active levels
		Location of Use	Outdoor Environment
	CULTURAL/AESTHETIC	Color Scheme	Inviting vibrant -vs.- Subtle earth tones
		Signage	
		Styling	Design must consider the size of all breeds
	PRACTICAL PHYSIOLOGICAL	Weight	Design must allow for easy assembly but also be heavy enough to remain stationary
		Size	8' or less (height), 20' or larger in diameter (total area)
		Maintenance	

Table 13 - MarkiT User Function P.C.

		PARAMETERS	CRITERIA
TECHNICAL PERFORMANCE	DIRECT TECHNICAL	Curbing	
		Material	Rotomolded plastic
		Shape	
		Diameter	
		Surfacing	
		Trash receptacle	
		Material	undetermined
		Diameter	undetermined
		Trees	
		Material	3.5" tubing
		Diameter	3.5"
		Poles	
		Material	3.5" tubing
		Diameter	3.5"
	INDIRECT TECHNICAL	Environment Interaction	All materials must work well with all outdoor elements
		User Interaction	All materials must be non-toxic harmless to canines and humans
		Safety	Product must comply with existing ASTM standards

Table 14 - MarkiT Technical Function P.C.

		PARAMETERS	CRITERIA
PRODUCTION PERFORMANCE	PLANNING	Distribution	PlayCore Direct shipping
		Packaging	undetermined
		Shipping weight	undetermined
		Box Dimensions	undetermined
		Marketing	PlayCore, GameTime, ParkStructures catalog and or website
	MANUFACTURING	Curbing	8" by 4' rotomolded plastic curbing
		Trash receptacle	undetermined
		Trees	3.5" galvanized tubing
		Poles	3.5" galvanized tubing
		Surfacing	Sand

Table 15 - MarkiT Production Function P.C.

Performance Criteria for GetiT

		PARAMETERS	CRITERIA
HUMAN PERFORMANCE	SOCIAL/ECONOMIC	Type of Users:	
		Gender	Any (72.6% female)
		Age Range	Any (18 to 65 make up the majority of primary owners)
		Activity Level	Able to handle a pet in an outdoor environment
		Location of Use	Outdoor Environment
	CULTURAL/AESTHETIC	Color Scheme	Inviting vibrant -vs.- Subtle earth tones
		Signage	where intuitive design lacks, there should be clear instructional signage
		Styling	only slight abstraction from intuitive shapes conducive to the function of the product
	PRACTICAL PHYSIOLOGICAL	Weight	Design should allow assembly by no more than two persons
		Size	Design should allow assembly by no more than two persons
		Maintenance	Regular maintenance is required for sanitary reasons
			-must have access plumbing for maintenance
CANINE PERFORMANCE	SOCIAL/ECONOMIC	Type of Users:	
		Breed	All Breeds
		Age Range	puppy to active adult
		Activity Level	All active levels
		Location of Use	Outdoor Environment
	CULTURAL/AESTHETIC	Color Scheme	Inviting vibrant -vs.- Subtle earth tones
		Signage	
		Styling	Design must consider the size of all breeds
	PRACTICAL PHYSIOLOGICAL	Weight	Design must allow for easy assembly but also be heavy enough to remain stationary
		Size	6" or less (height), 2' or larger in diameter (total area)
		Maintenance	

Table 16 - GetiT User Function P.C.

		PARAMETERS	CRITERIA
TECHNICAL PERFORMANCE	DIRECT TECHNICAL	Base	
		Material	Rotomolded plastic
		Shape	must allow access from 360 degrees
		Diameter	2' or larger
		Surfacing	nonskid water resistant surface
		Top	
		Material	Rotomolded plastic
		Diameter	undetermined
		Plumbing	
		Material	PVC or Copper tubing
		Diameter	.5" to 1"
	INDIRECT TECHNICAL	Environment Interaction	All materials must work well with all outdoor elements (mainly water)
		User Interaction	All materials must be non-toxic harmless to canines and humans
		Safety	Product must comply with existing ASTM standards

Table 17 - GetiT Technical Function P.C.

		PARAMETERS	CRITERIA
PRODUCTION PERFORMANCE	PLANNING	Distribution	PlayCore Direct shipping
		Packaging	undetermined
		Shipping weight	undetermined
		Box Dimensions	undetermined
		Marketing	PlayCore, GameTime, ParkStructures catalog and or website
	MANUFACTURING	Base	Rotomolded plastic
		Top	Rotomolded plastic
		Plumbing	.5" to 1" PVC or copper tubing

Table 18 - GetiT Production Function P.C.

Performance Criteria for TugiT

		PARAMETERS	CRITERIA
HUMAN PERFORMANCE	SOCIAL/ECONOMIC	Type of Users:	
		Gender	Any (72.6% female)
		Age Range	Any (18 to 65 make up the majority of primary owners)
		Activity Level	Able to handle a pet in an outdoor environment
		Location of Use	Outdoor Environment
	CULTURAL/AESTHETIC	Color Scheme	Inviting vibrant -vs.- Subtle earth tones
		Signage	where intuitive design lacks, there should be clear instructional signage
		Styling	only slight abstraction from intuitive shapes conducive to the function of the product
	PRACTICAL PHYSIOLOGICAL	Weight	Design should allow assembly by no more than two persons
		Size	Design should allow assembly by no more than two persons
		Maintenance	Minimal to No maintenance for the life of the product
			-must have access to replaceable parts
CANINE PERFORMANCE	SOCIAL/ECONOMIC	Type of Users:	
		Breed	Baiting breeds (all breeds have the ability to tug and pull)
		Age Range	puppy to active adult
		Activity Level	Active baiting breeds (this product is meant to alleviate the need to tug or chew)
		Location of Use	Outdoor Environment
	CULTURAL/AESTHETIC	Color Scheme	Inviting vibrant -vs.- Subtle earth tones
		Signage	
		Styling	Design must consider the size and ability of all breeds
	PRACTICAL PHYSIOLOGICAL	Weight	Design must allow for easy assembly but also be heavy enough to remain stationary
		Size	4' or less (height), 8' or less in diameter (total area)
		Maintenance	

Table 19 - TugiT User Function P.C.

		PARAMETERS	CRITERIA
TECHNICAL PERFORMANCE	DIRECT TECHNICAL	Cross Bar	
		Material	1" metal tubing
		Shape	depends on theme
		Diameter	1"
		Surfacing	
		Plate	
		Material	Laser cut aluminum sheet
		Shape	depends on theme
		Diameter	
		Surfacing	
	INDIRECT TECHNICAL	Environment Interaction	All materials must work well with all outdoor elements
		User Interaction	All materials must be non-toxic harmless to canines and humans
		Safety	Product must comply with existing ASTM standards

Table 20 - TugiT Technical Function P.C.

		PARAMETERS	CRITERIA
PRODUCTION PERFORMANCE	PLANNING	Distribution	PlayCore Direct shipping
		Packaging	undetermined
		Shipping weight	undetermined
		Box Dimensions	undetermined
		Marketing	PlayCore, GameTime, ParkStructures catalog and or website
	MANUFACTURING	Cross Bar	1" metal tubing
		Plate	Aluminum sheet laser cut to specific shape

Table 21 - TugiT Production Function P.C.

4.3.3 INTERACTION MATRIX

The purpose of an interaction matrix is to give the designer a better understanding of which parts of a product will be used more frequently than others. This information helps by showing which parts must be durable, safe and aesthetically pleasing. For

example, in the interaction matrix of DigiT, shown in Table 22 (below), the braces are considered to interact with the environment more than any other part in the assembly. Therefore, it should be able to handle the constant interaction with heat, cold, UV light and sand.

The following interaction matrices are divided into: Environmental interaction, canine interaction and human interaction. By recording this information and ranking each part or assembly, I was able to decide on materials that were best suited for the appearance and durability for each new product.

DigiT Interaction Matrix

Parts & Assemblies	Environment	UV Light	Heat	Cold	Water	Sharp Objects	Grass	Dirt	Sand	Wind	Canine	Hair	Paws	Claws	Eyes	Mouth	Human	Hands	Feet	Eyes	Legs	Arms		Totals
Sand Box		1	2	2	1	1	1	1	2	0		0	1	2	1	0		1	0	1	0	0		17
Basket		2	2	2	1	0	0	0	1	2		0	1	1	2	0		2	0	2	0	1		19
Braces		2	2	2	1	1	0	0	2	1		0	1	1	2	1		1	0	2	0	1		20
Sand		2	2	2	1	0	0	0	0	2		2	2	2	2	1		2	1	2	0	1		24
Ball		1	1	1	1	0	2	2	2	1		0	1	0	2	2		2	1	2	0	0		21

Table 22 - DigiT Interaction Matrix

ClimbiT Interaction Matrix

Parts & Assemblies	Environment	UV Light	Heat	Cold	Water	Sharp Objects	Grass	Dirt	Sand	Wind	Canine	Hair	Paws	Claws	Eyes	Mouth	Human	Hands	Feet	Eyes	Legs	Arms		Totals
Base		2	2	2	1	1	1	1	1	1		2	2	1	2	0		1	2	2	0	0		24
Stacker		2	2	2	2	1	0	0	0	1		2	2	1	2	0		2	2	2	0	0		23
Stakes		0	2	2	1	0	1	2	2	0		0	0	0	1	0		1	0	1	0	1		14

Table 23 - ClimbiT I.M.

SwingiT Interaction Matrix

Parts & Assemblies	Environment	UV Light	Heat	Cold	Water	Sharp Objects	Grass	Dirt	Sand	Wind	Canine	Hair	Paws	Claws	Eyes	Mouth	Human	Hands	Feet	Eyes	Legs	Arms		Totals
Cross Bar		2	2	2	1	1	0	1	1	1		0	0	0	2	0		1	0	2	0	1		17
Clamps		0	2	2	1	0	0	0	0	0		0	0	0	1	0		1	0	1	0	0		8
Swings		2	2	2	1	2	0	0	0	1		2	0	0	2	2		2	0	2	0	0		20

Table 24 - SwingiT I.M.

JumpiT Interaction Matrix

Parts & Assemblies	Environment	UV Light	Heat	Cold	Water	Sharp Objects	Grass	Dirt	Sand	Wind	Canine	Hair	Paws	Claws	Eyes	Mouth	Human	Hands	Feet	Eyes	Legs	Arms		Totals
Base		2	2	2	1	1	0	1	1	1		0	0	0	2	0		1	0	2	0	0		16
Runners		2	2	2	1	1	0	0	0	1		1	1	1	2	1		1	0	2	0	0		18
Adjustable Hurdle		2	2	2	1	1	0	0	0	1		2	1	1	2	1		2	0	2	0	1		21
Clamps		1	2	2	1	0	0	0	0	0		0	0	0	1	0		1	0	1	0	0		9

Table 25 - JumpiT I.M.

MarkiT Interaction Matrix

Parts & Assemblies	Environment	UV Light	Heat	Cold	Water	Sharp Objects	Grass	Dirt	Sand	Wind	Canine	Hair	Paws	Claws	Eyes	Mouth	Human	Hands	Feet	Eyes	Legs	Arms		Totals
Curbing		1	2	2	2	1	1	2	1	0		0	1	1	1	0		1	2	1	0	0		19
Trash Receptacle		2	2	2	1	1	0	0	0	2		1	0	1	2	0		2	0	2	0	0		18
Trees		2	2	2	2	0	0	1	2	2		0	1	1	2	0		1	0	2	0	0		20
Poles		2	2	2	1	1	0	0	2	1		0	0	1	2	0		1	1	2	0	0		18
Surfacing		2	2	2	2	0	0	2	0	2		2	2	2	2	0		1	2	2	2	0		27

Table 26 - MarkiT I.M.

GetiT Interaction Matrix

Parts & Assemblies	Environment	UV Light	Heat	Cold	Water	Sharp Objects	Grass	Dirt	Sand	Wind	Canine	Hair	Paws	Claws	Eyes	Mouth	Human	Hands	Feet	Eyes	Legs	Arms		Totals
Base		1	2	2	2	1	1	1	1	1		1	1	1	2	1		1	1	2	0	0		22
Top		2	2	2	2	1	0	0	0	1		2	2	2	2	2		1	1	2	0	0		24
Plumbing		0	1	1	2	0	0	0	0	0		0	0	0	0	0		2	0	1	0	0		8

Table 27 - GetiT I.M.

TugiT Interaction Matrix

Parts & Assemblies	Environment	UV Light	Heat	Cold	Water	Sharp Objects	Grass	Dirt	Sand	Wind	Canine	Hair	Paws	Claws	Eyes	Mouth	Human	Hands	Feet	Eyes	Legs	Arms		Totals
Cross Bar		2	2	2	1	1	0	1	1	1		1	1	1	2	1		2	0	2	0	0		21
Plate		2	2	2	1	1	0	0	0	2		1	1	1	2	1		1	0	2	0	0		19
Replaceable Toys		1	2	2	2	2	0	2	2	0		1	2	2	2	2		1	0	2	0	0		25

Table 28 - TugiT I.M.

4.3.4 3D CONCEPT ALTERNATIVES

After producing concept alternatives and modifications, I created pre-prototypes at 1/12th scale in order get an understanding of size and form of potential design solutions. Once these pre-prototypes were made I could then begin to measure their effectiveness by comparing them to the parameters listed in the performance criteria of each concept.

The following are scale models of each design shown in previous sections. I was also able to use the 3D concept alternatives to show how potential design solutions would be manufactured and assembled.

3D Concepts for DigiT

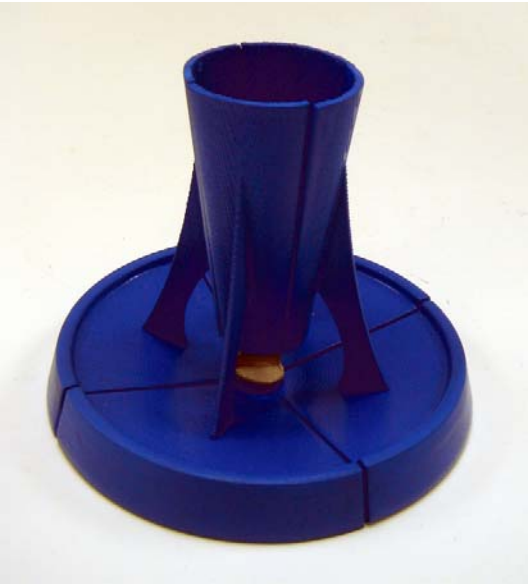

Figure 17 - DigiT Concept 1

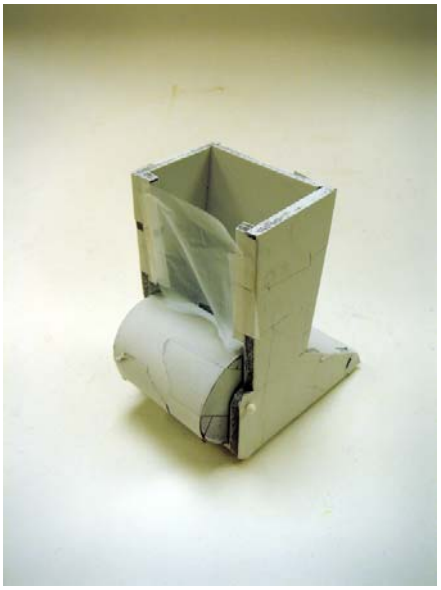

Figure 18 - Digit Concept 2

In Figure 17 and 18 (above) I mocked-up a scale version of concept alternatives for DigiT. The first model shows how a larger conical sandbox could be produced and assembled in four identical quadrants. The second model shows how a wheel or conveyer could be used instead of sand. Scale models for ClimbiT, shown in Figure 19 and 20 (on next page), are modular, rotational molded, plastic parts that can be assembled to resemble the layout in the original concept. In Figure 21 (on next page) I built a scale model that shows how this product would look if it were created by welding galvanized steel tubing into a frame with metal plates making up the surfaces.

3D Concepts for ClimbiT

Figure 19 - ClimbiT Concept 1 (view 1)

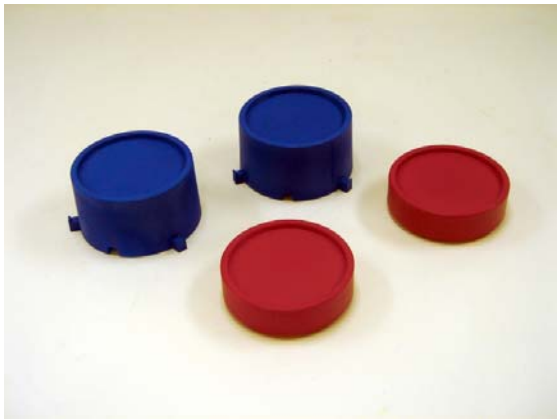

Figure 20 - ClimbiT Concept 1 (view 2)

Figure 21 - ClimbiT Concept 2

Although the original concept for SwingiT was divided into two products, I still wanted to get an idea of the overall scale of both products. In Figure 22 (below) I created a 1/24th scale model of SwingiT and TugiT as one product, much like the original concept.

3D Concepts for SwingiT and TugiT

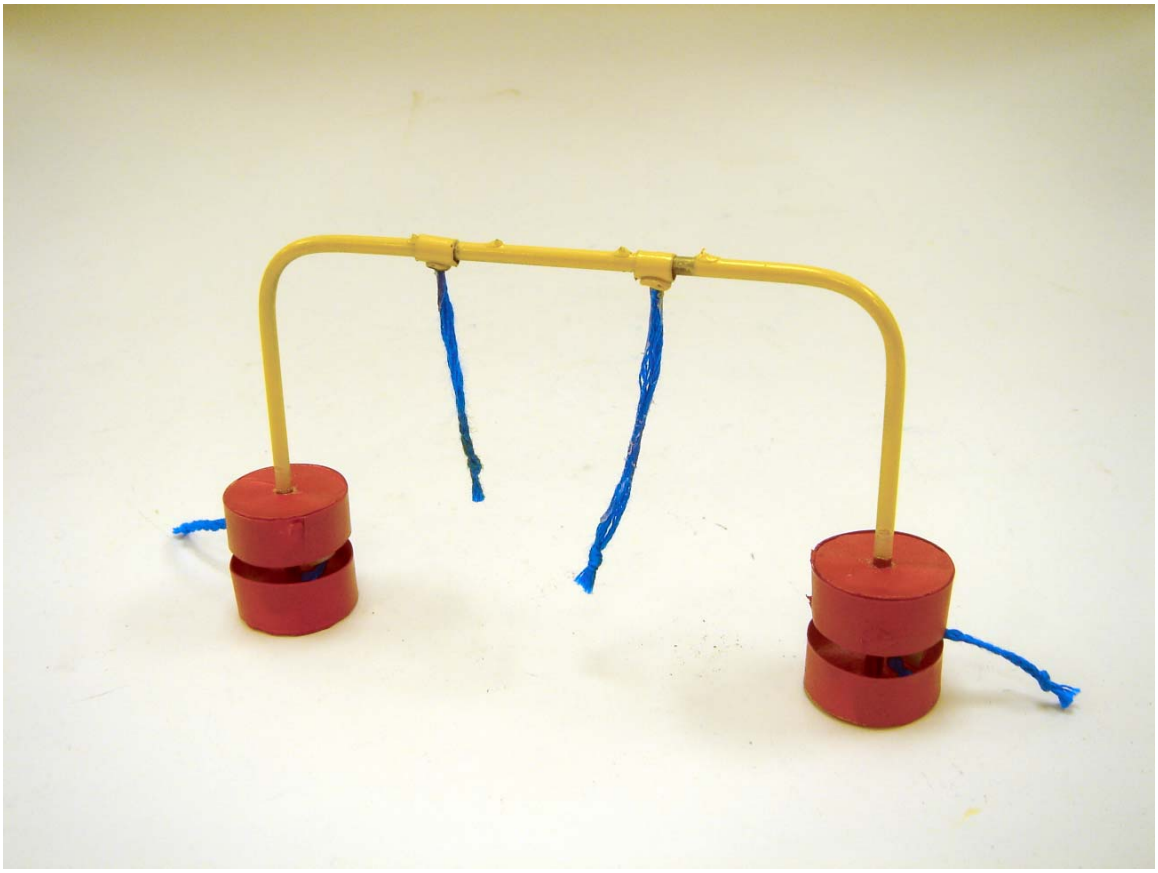

Figure 22 - SwingiT and TugiT Concept

The 3D concept alternative for JumpiT is at 1/12th scale and shows how the adjustable hurdle will work. The adjustable hurdle would be made with a high density plastic and will be larger than the metal runners allow creating a friction resistance. Friction created when the plastic hoop is pressed between the tubing allows the hurdle to stay in place.

3D Concept for JumpiT

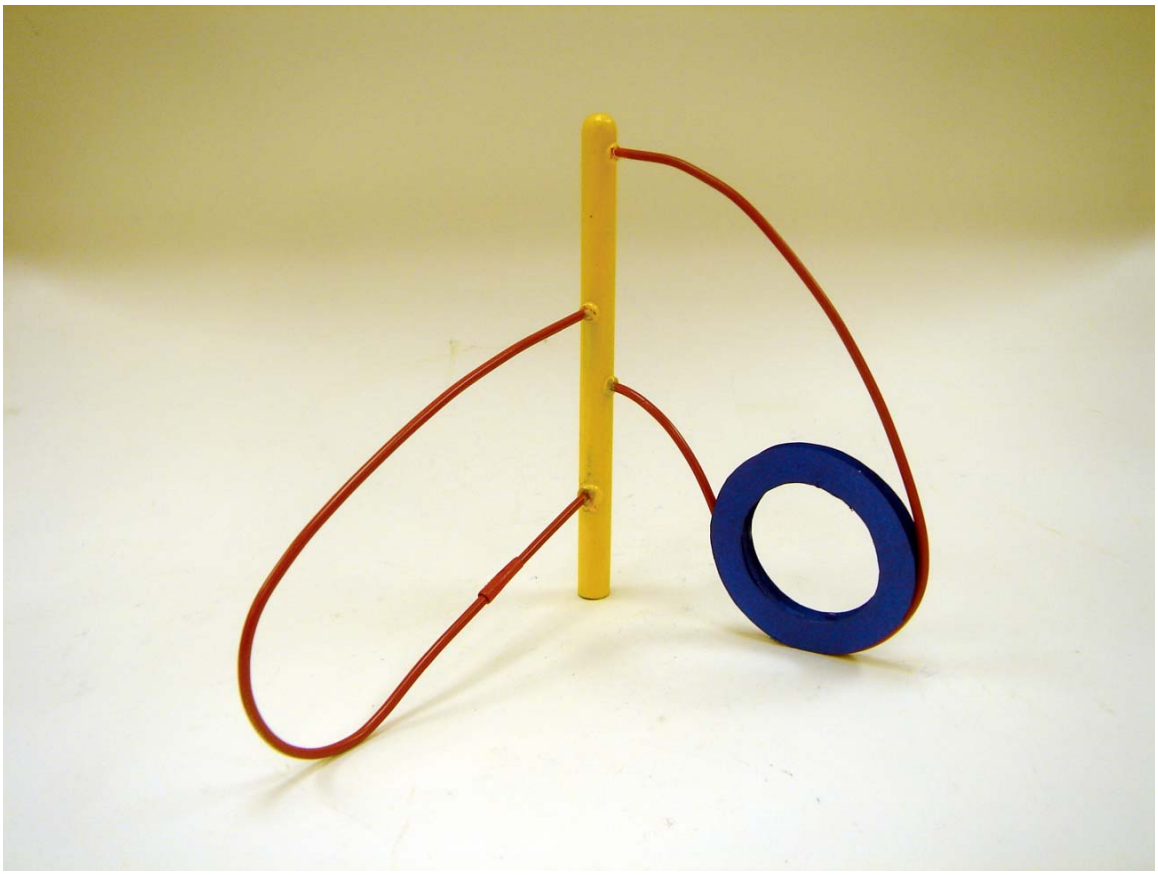

Figure 23 - JumpiT Concept

Figure 24 (below) shows a full scale model of GetiT. In order to test how the product will attach to a sprinkler system, I mocked up the plumbing and potential rotor assembly that would be used in a commercial dog park environment.

3D Concept for GetiT

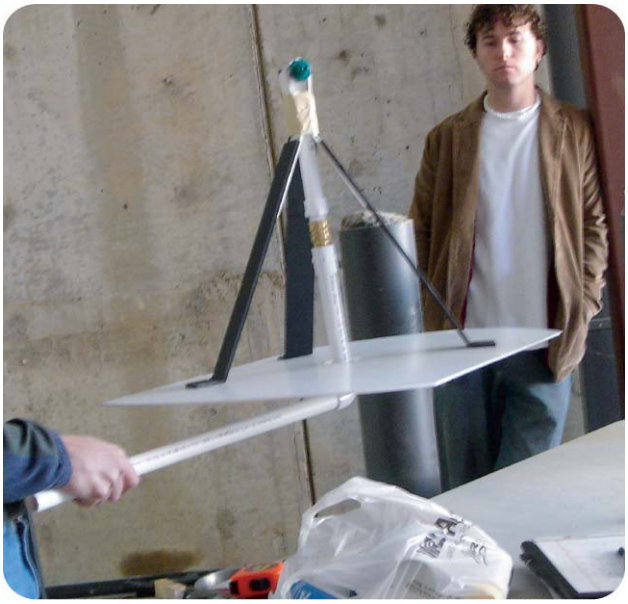

Figure 24 - GetiT Concept

4.4 PHASE 3: DESIGN COMMUNICATION

4.4.1 MATERIAL AND PROCESS ANALYSIS

After evaluating the performance criteria and 3D concept alternatives of each product, I was able to realize the materials and processes needed for each concept. Since these products are designed to go into commercial dog parks, they must be able to withstand the weather as well as constant wear and tear associated with animal users. All plastic parts are made of high density polyethylene or acrylic. The structural frames of

DigiT, JumpiT, SwingiT and TugiT are powder coated, galvanized steel tubing. By using information from the interaction matrices of each concept, I was also able to know what materials are best suited for human and canine interaction. For example, the tiling on the walking surface of DigiT should be a non-slick material with no perforation, in order to avoid any possible nail enclosures. The same goes for the surface of the modular stackers that makeup the ClimbiT system. As well as using materials best suited for scenarios formulated in the interaction matrix of each product, I also tried to use materials currently used by PlayCore in their products and assembly. By using as many of these materials as possible, production time and cost can be reduced.

4.4.2 CONTROL DRAWINGS

Once the design for each product was finalized, I began giving each product its overall dimensions. As well as showing size and dimension, the following control drawings include exploded views to show how the final product would be assembled.

DigiT Control Drawings

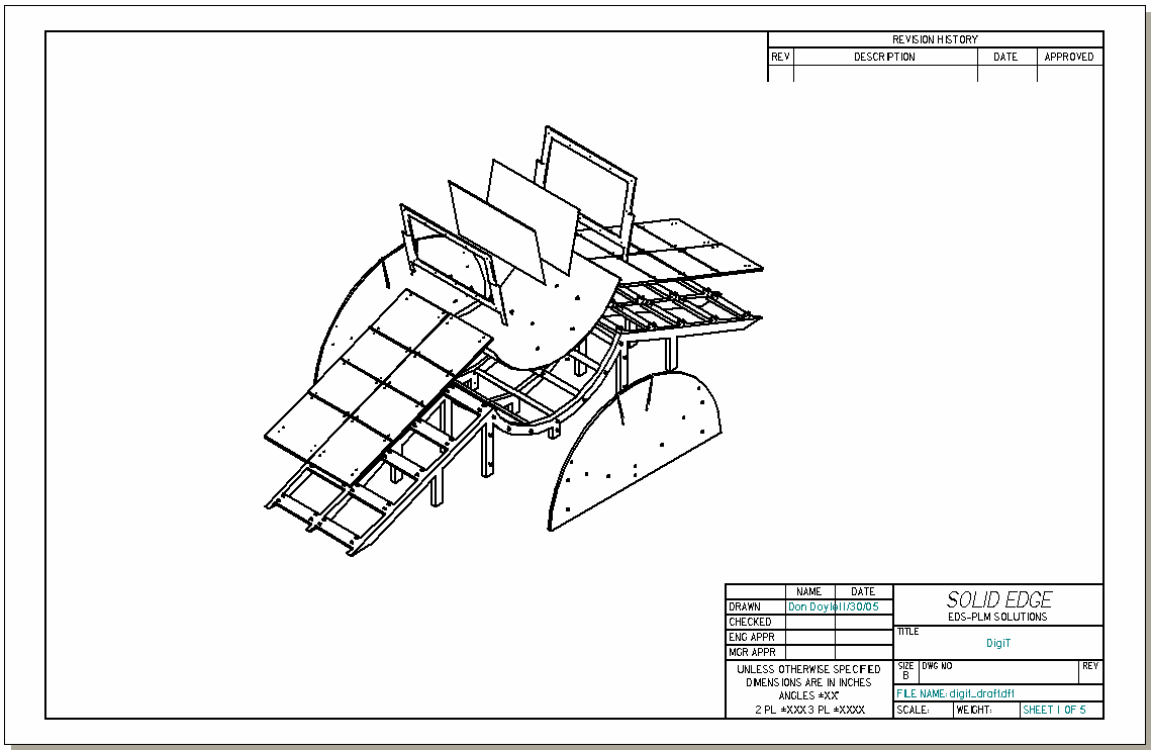

Figure 25 - DigiT Control Drawing 1

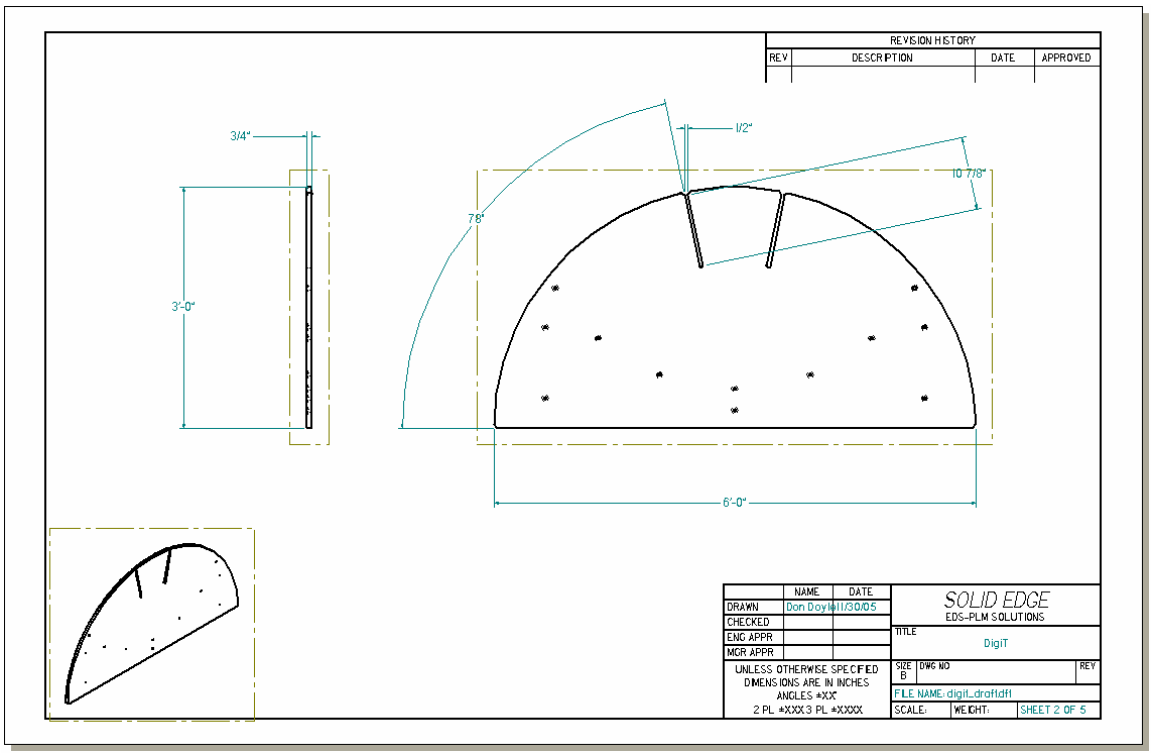

Figure 26 - ClimbiT Control Drawing 2

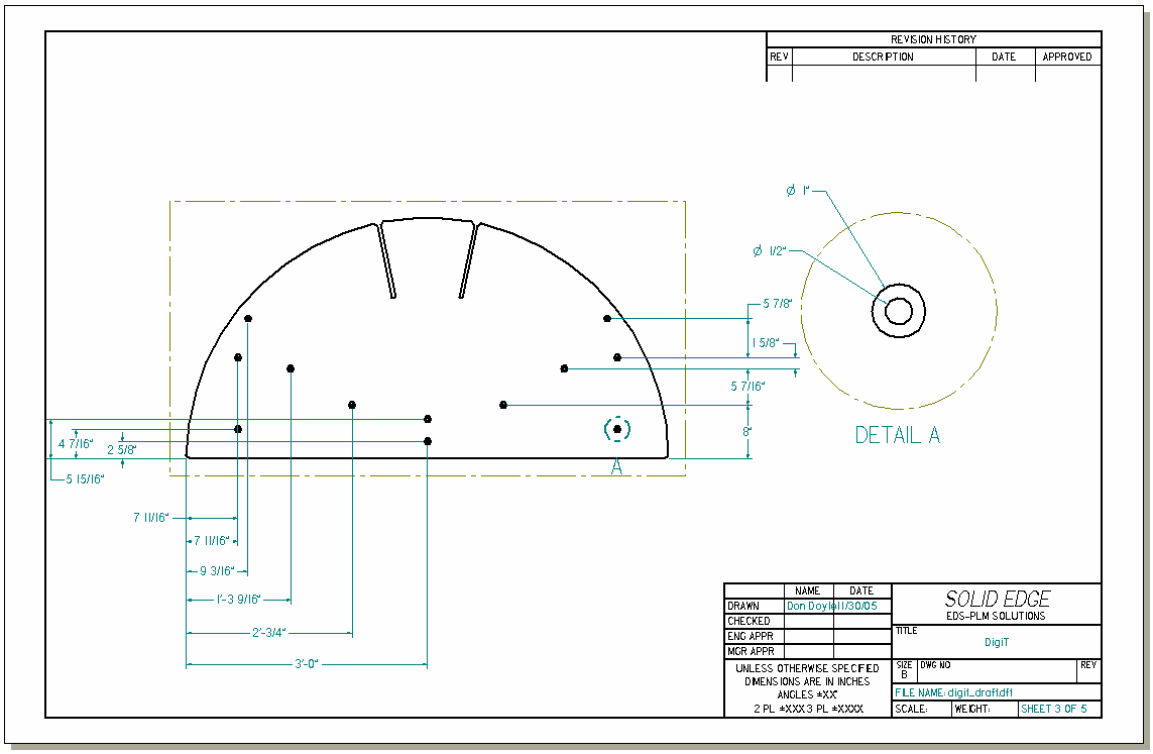

Figure 27 - ClimbiT Control Drawing 3

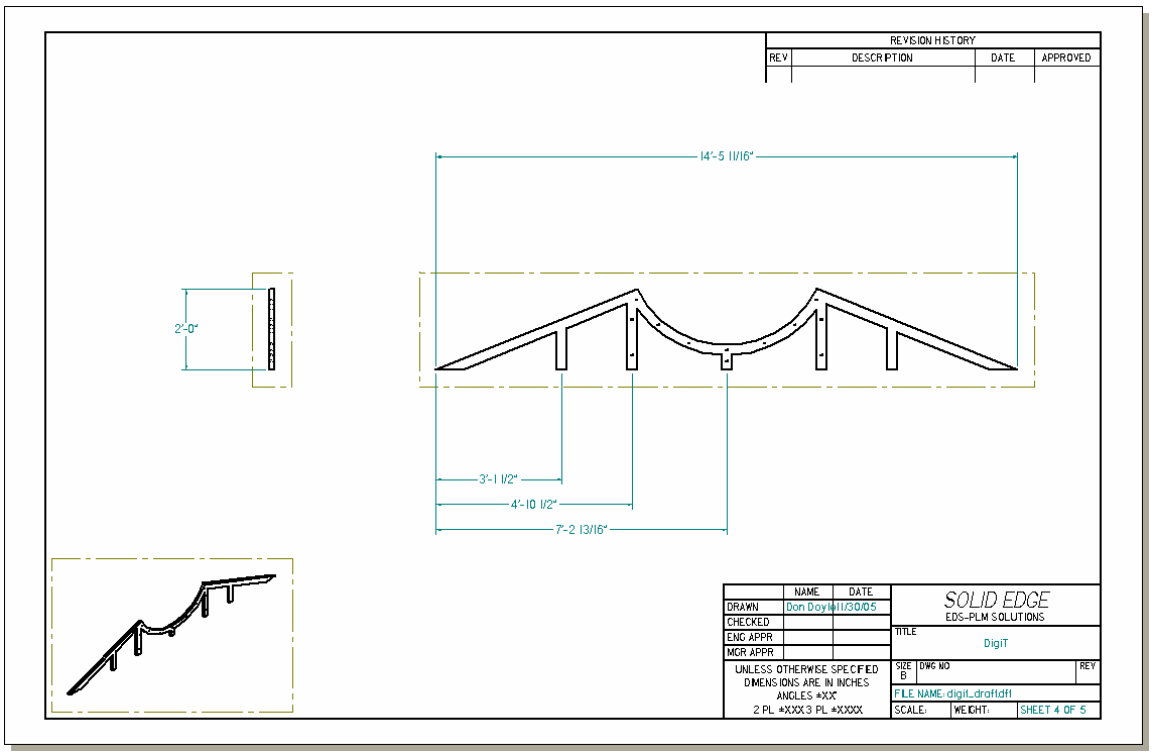

Figure 28 - ClimbiT Control Drawing 4

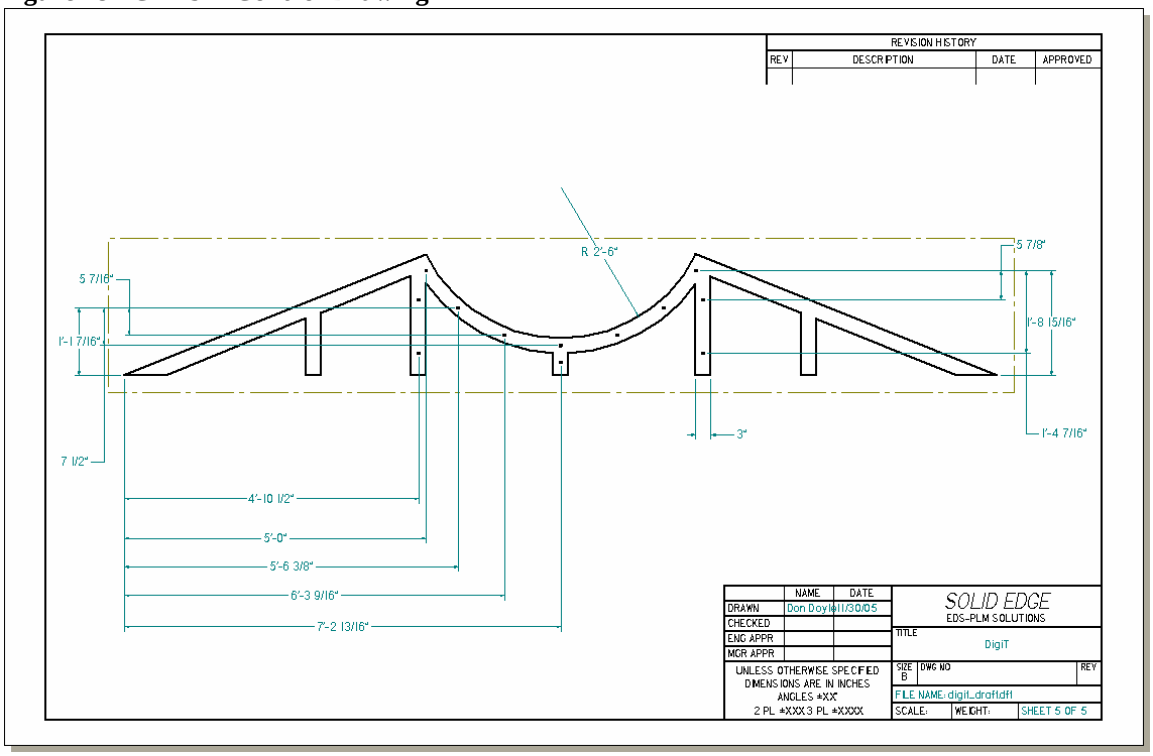

Figure 29 - ClimbiT Control Drawing 5

ClimbiT Control Drawings

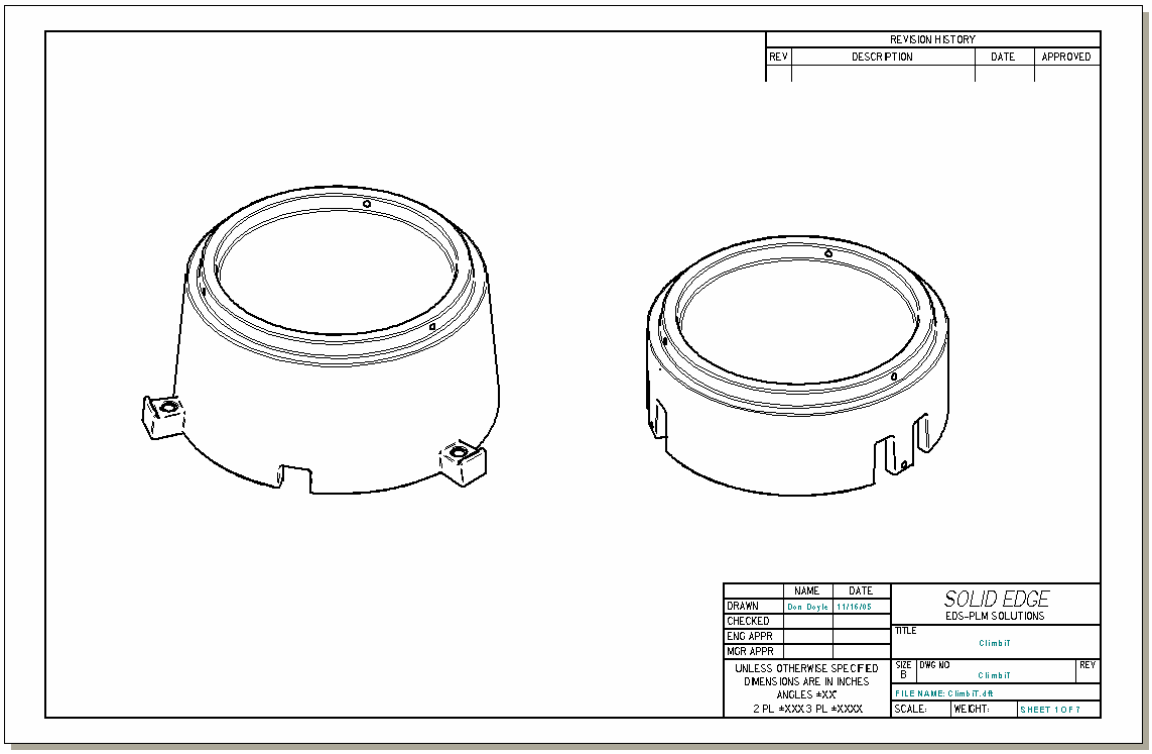

Figure 30 - ClimbiT Control Drawing 1

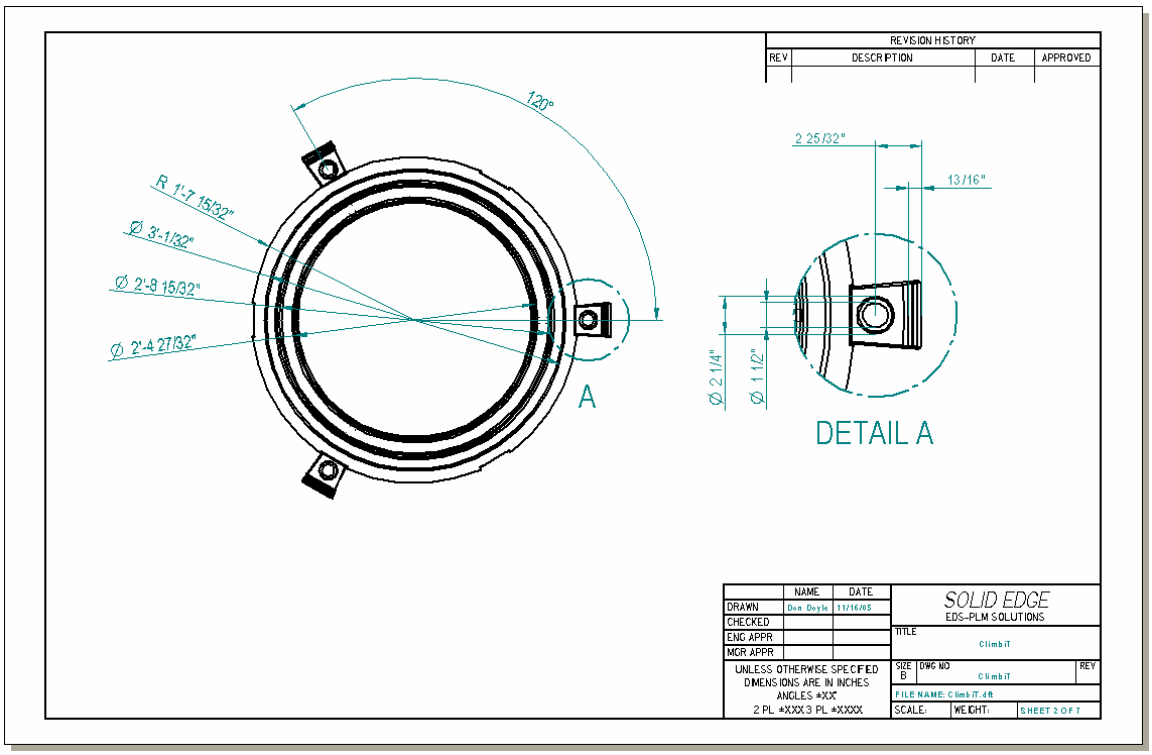

Figure 31 - ClimbiT Control Drawing 2

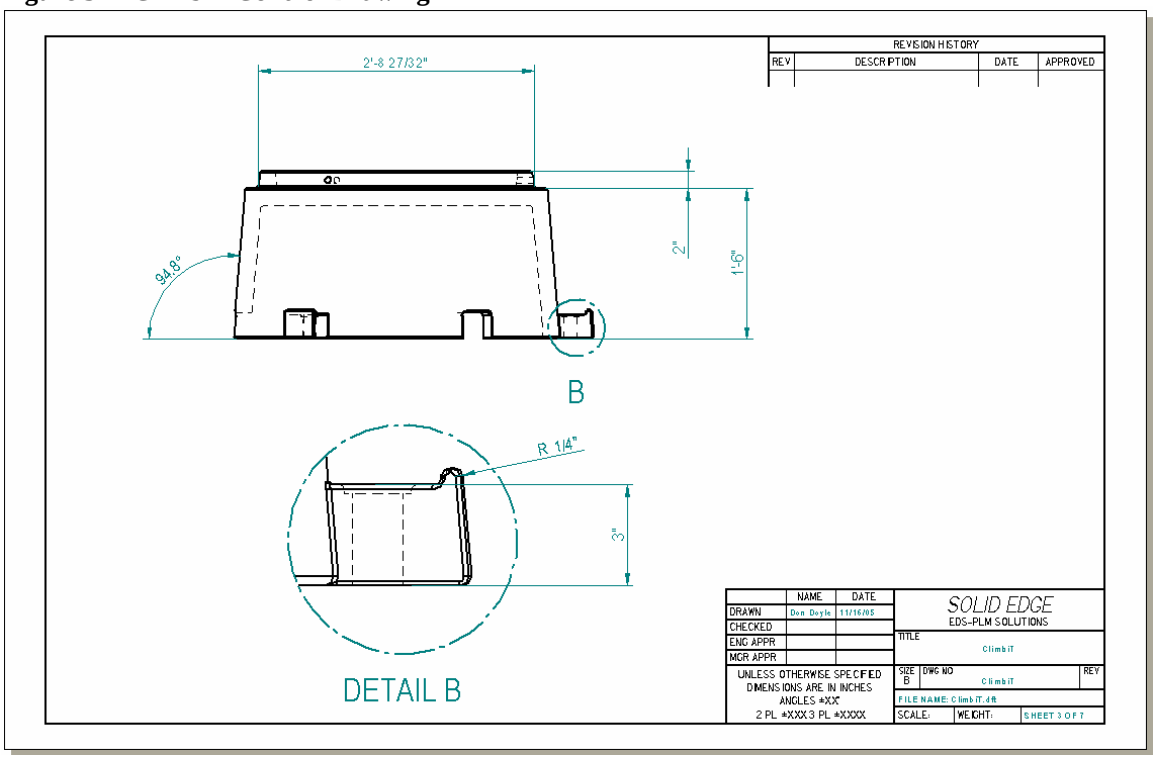

Figure 32 - ClimbiT Control Drawing 3

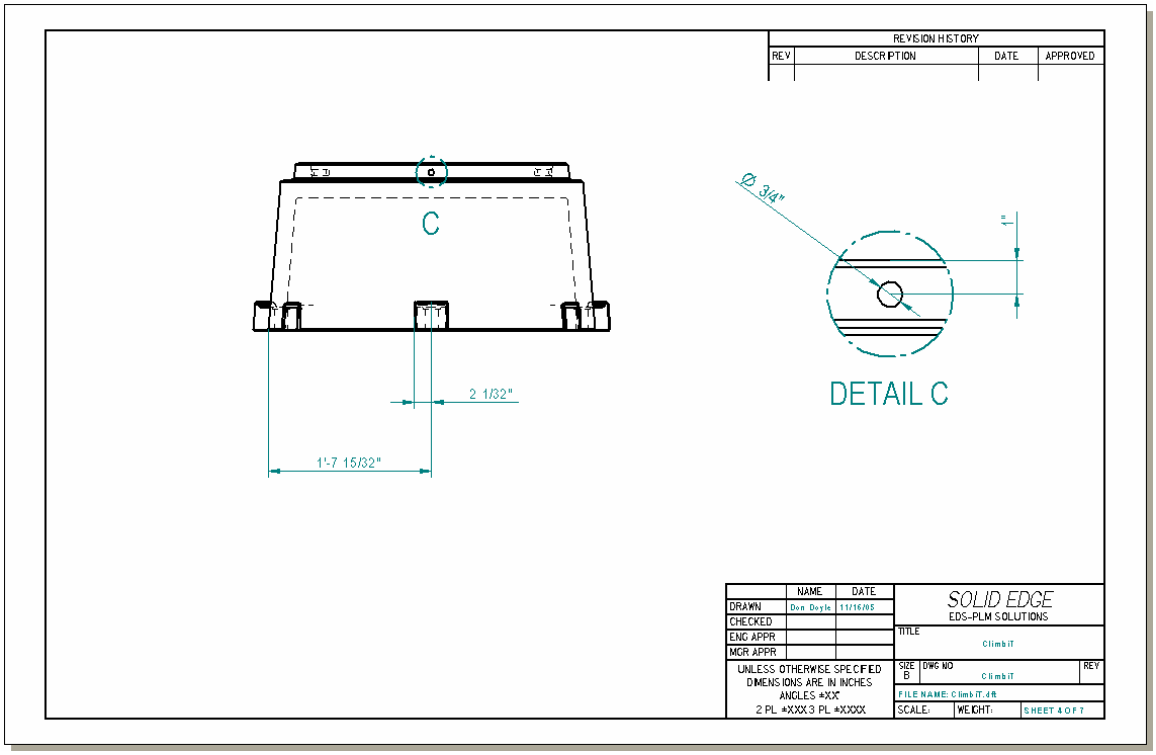

Figure 33 - ClimbiT Control Drawing 4

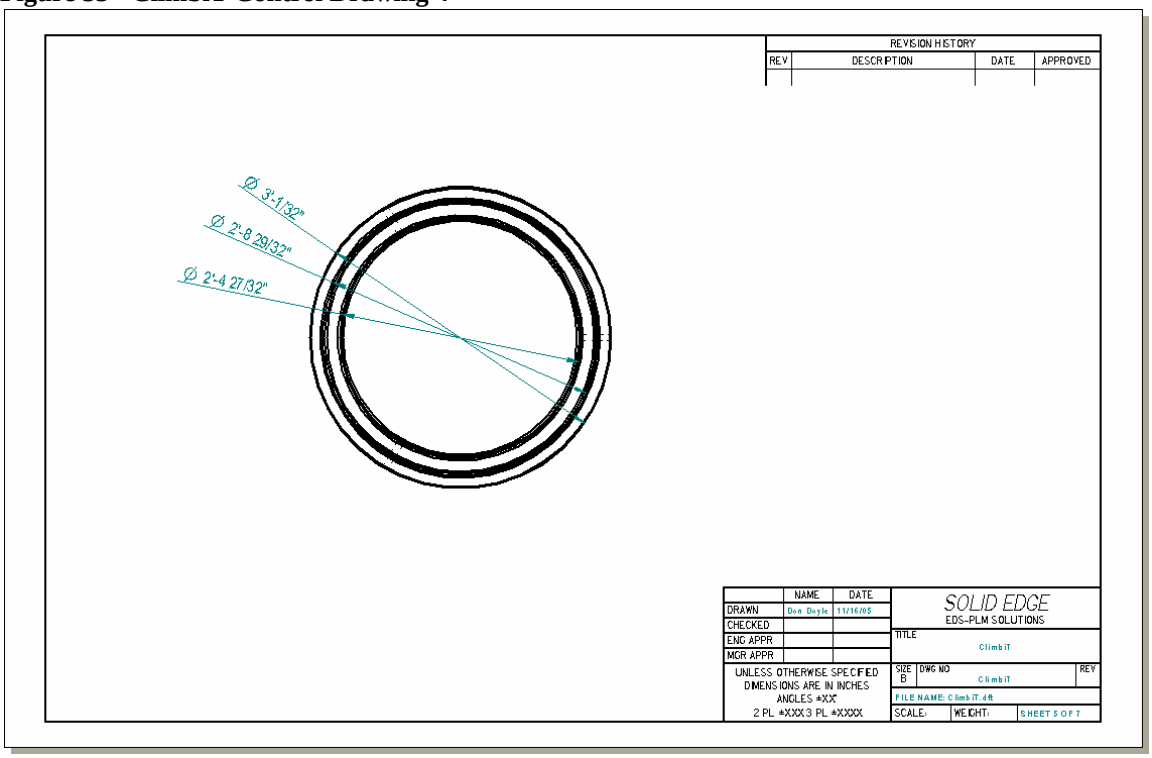

Figure 34 - ClimbiT Control Drawing 5

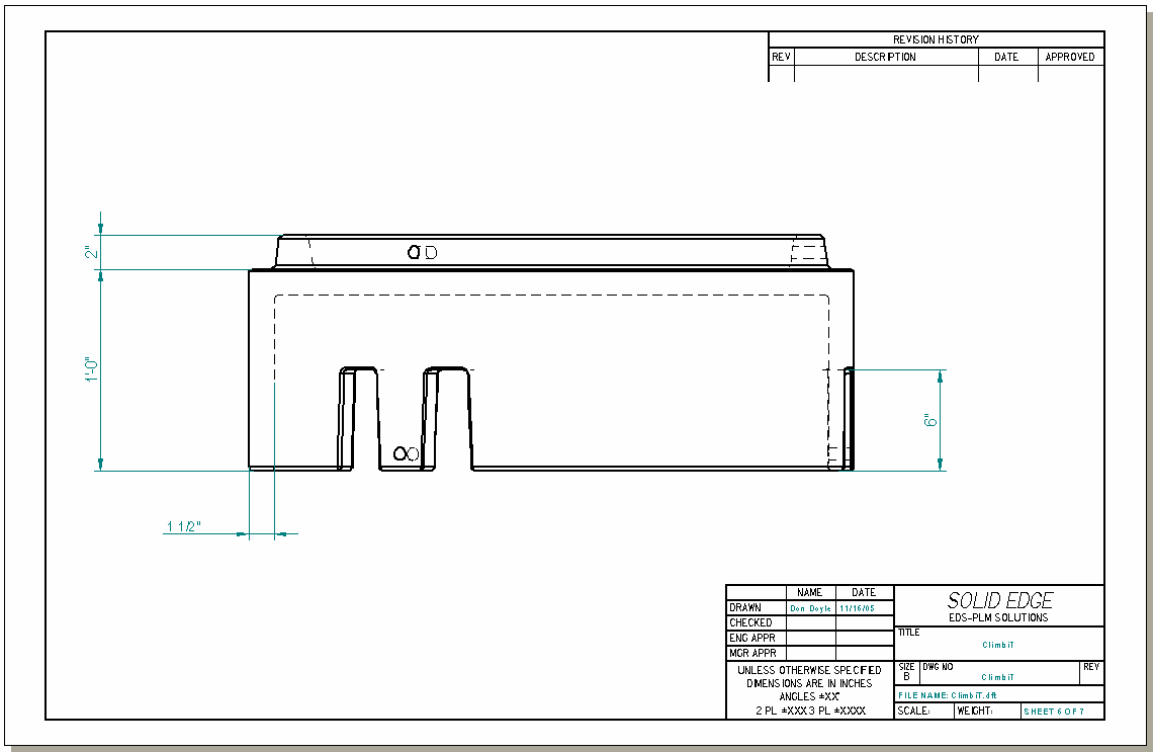

Figure 35 - ClimbiT Control Drawing 6

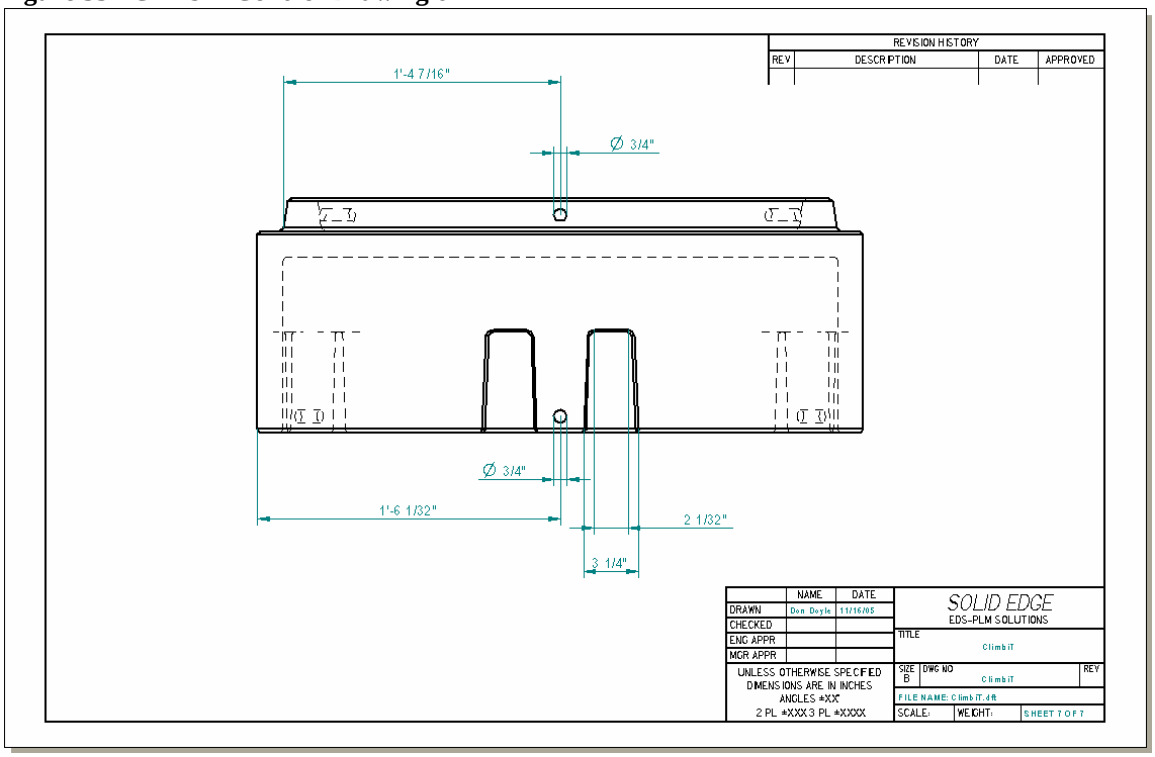

Figure 36 - ClimbiT Control Drawing 7

SwingiT Control Drawings

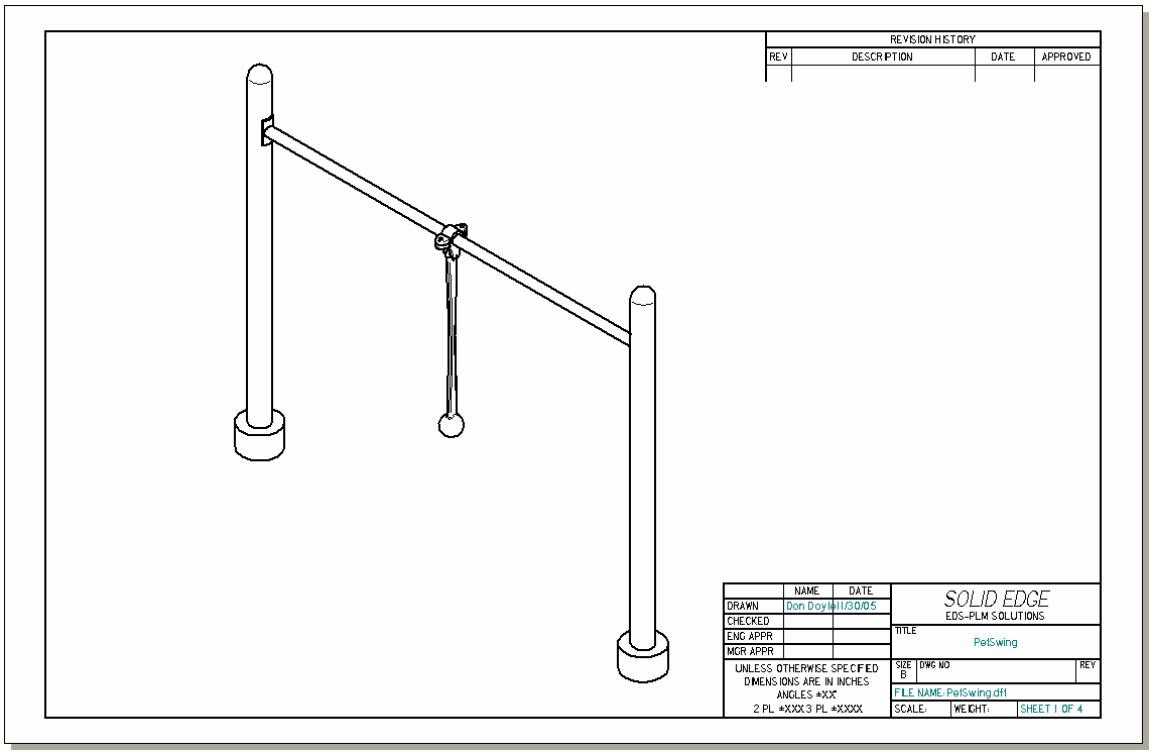

Figure 37 - SwingiT Control Drawing 1

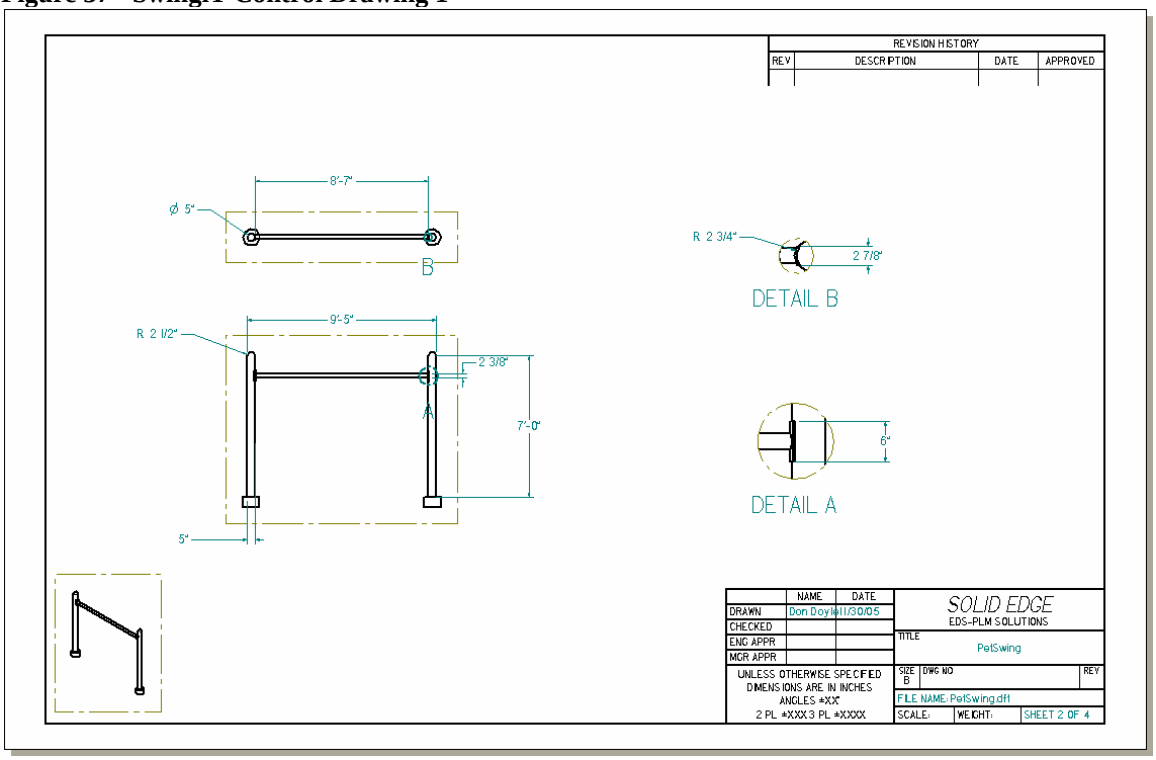

Figure 38 - SwingiT Control Drawing 2

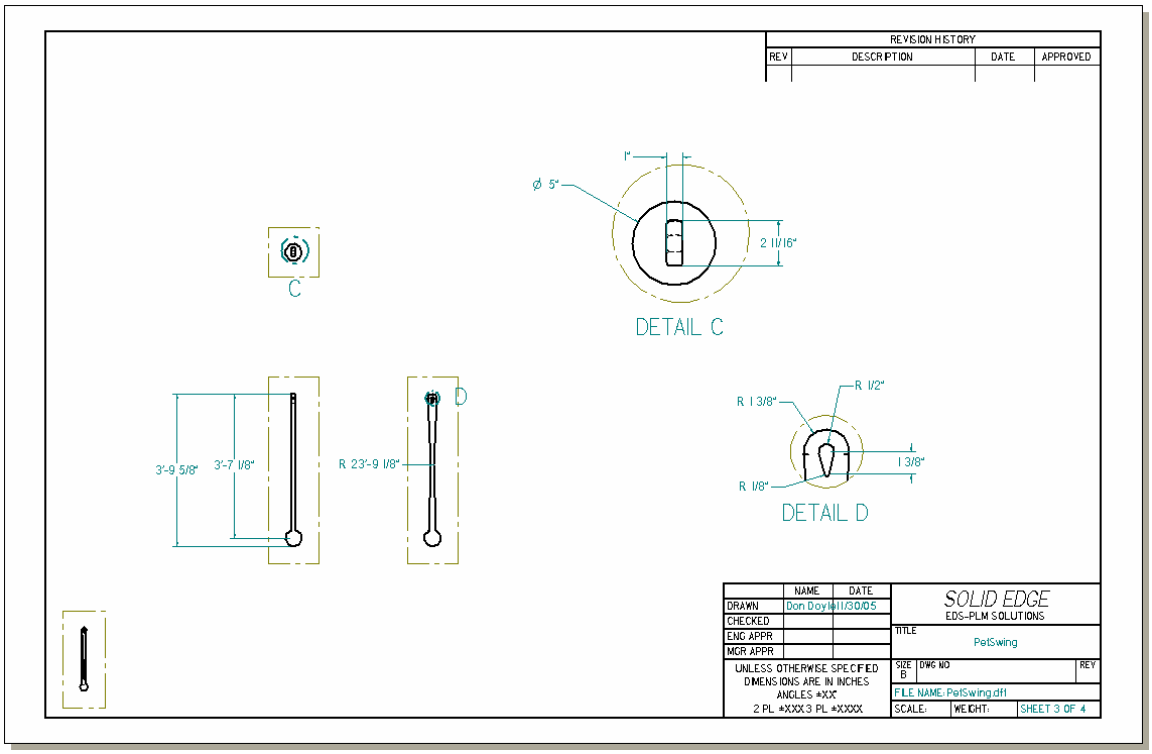

Figure 39 - SwingiT Control Drawing 3

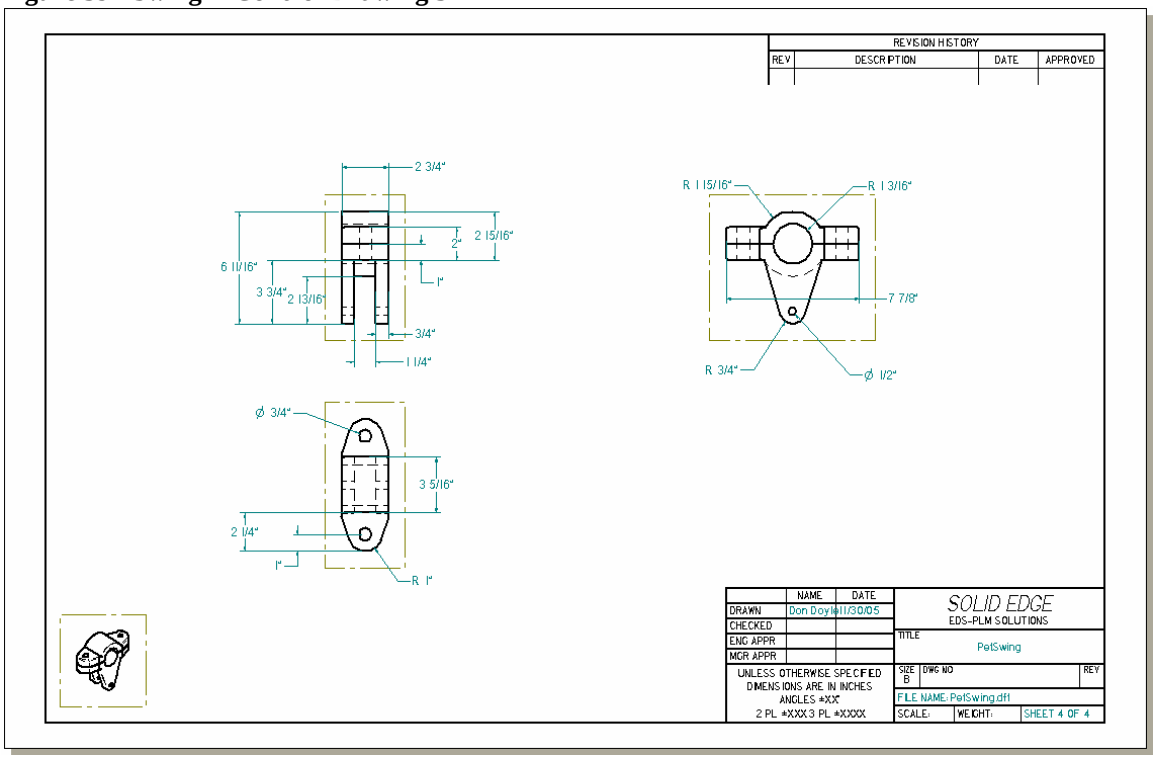

Figure 40 - SwingiT Control Drawing 4

TugiT Control Drawings

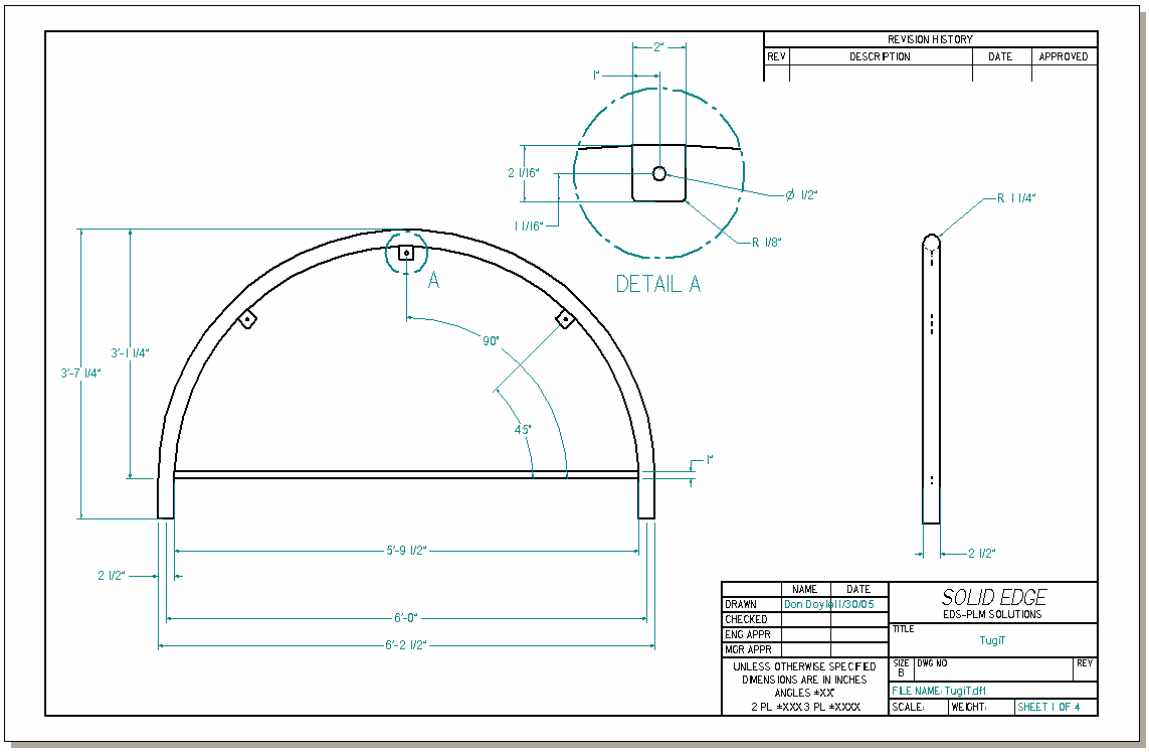

Figure 41 - TugiT Control Drawing 1

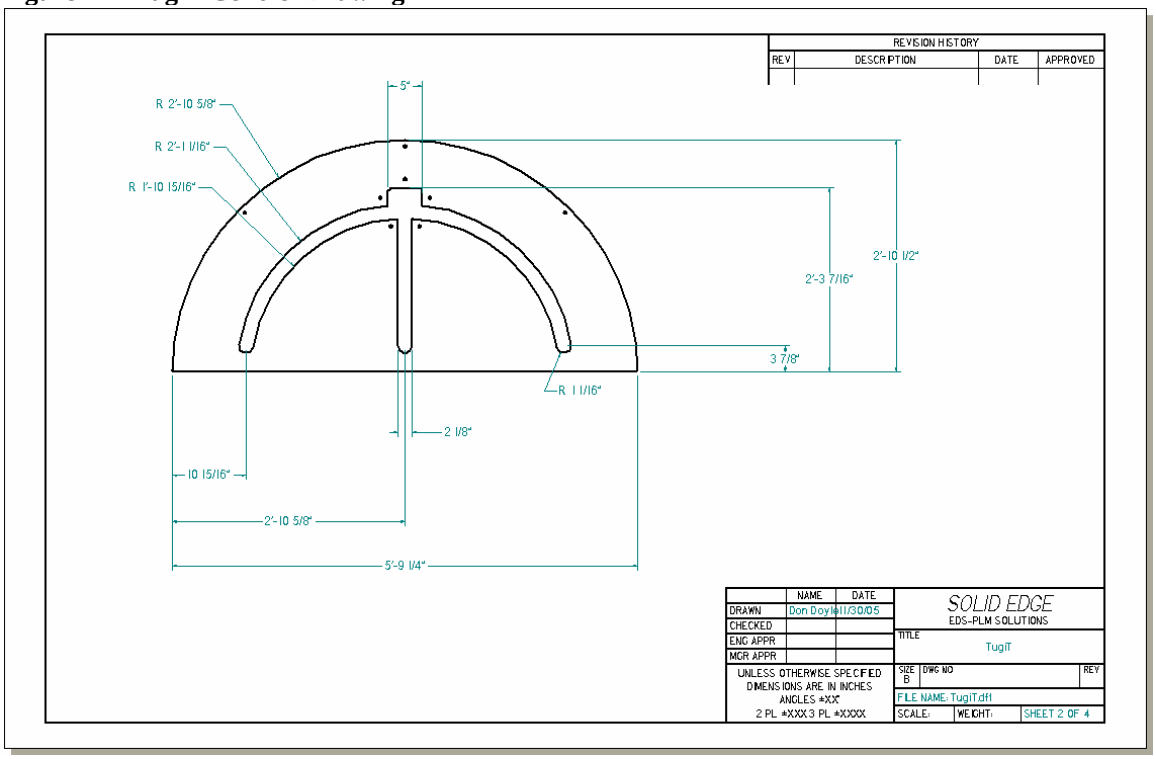

Figure 42 - TugiT Control Drawing 2

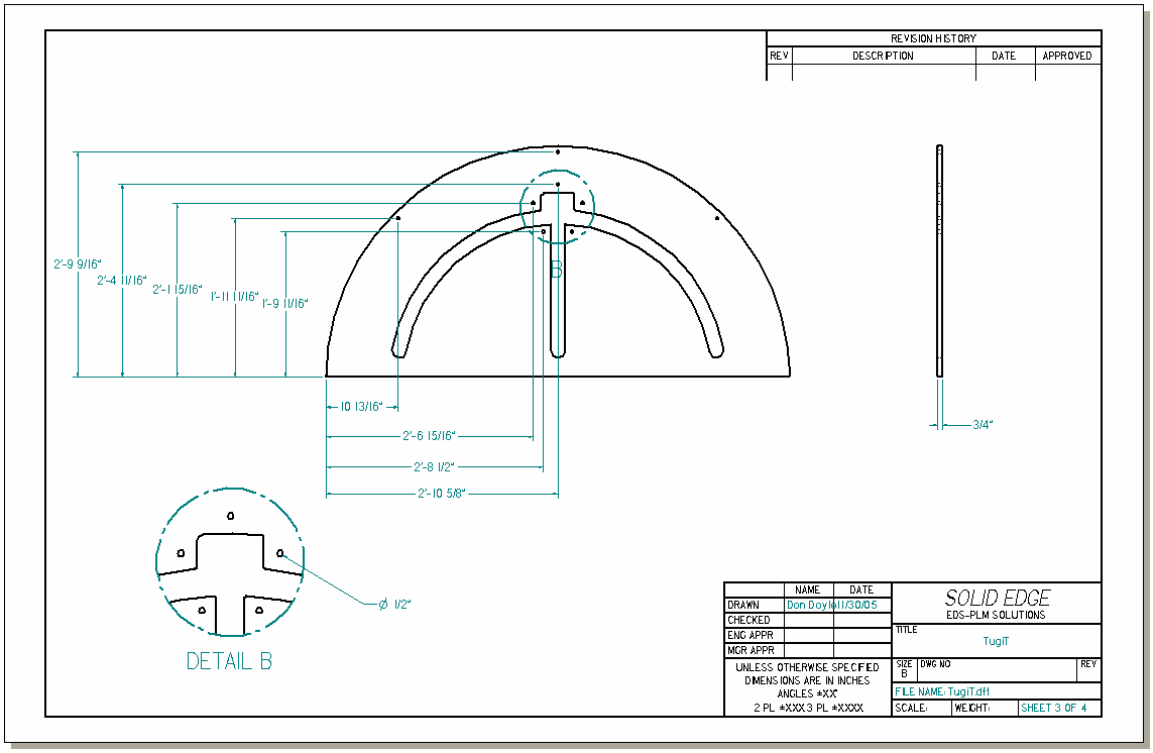

Figure 43 - TugiT Control Drawing 3

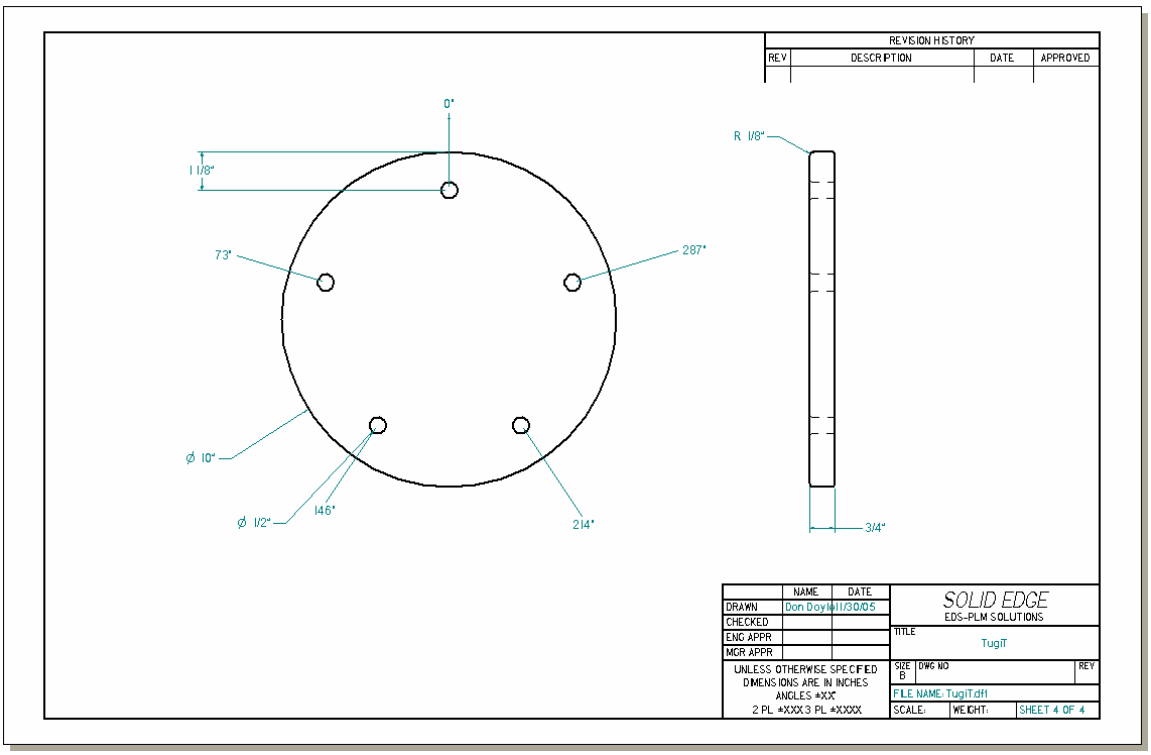

Figure 44 - ClimbiT Control Drawing 4

JumpiT Control Drawings

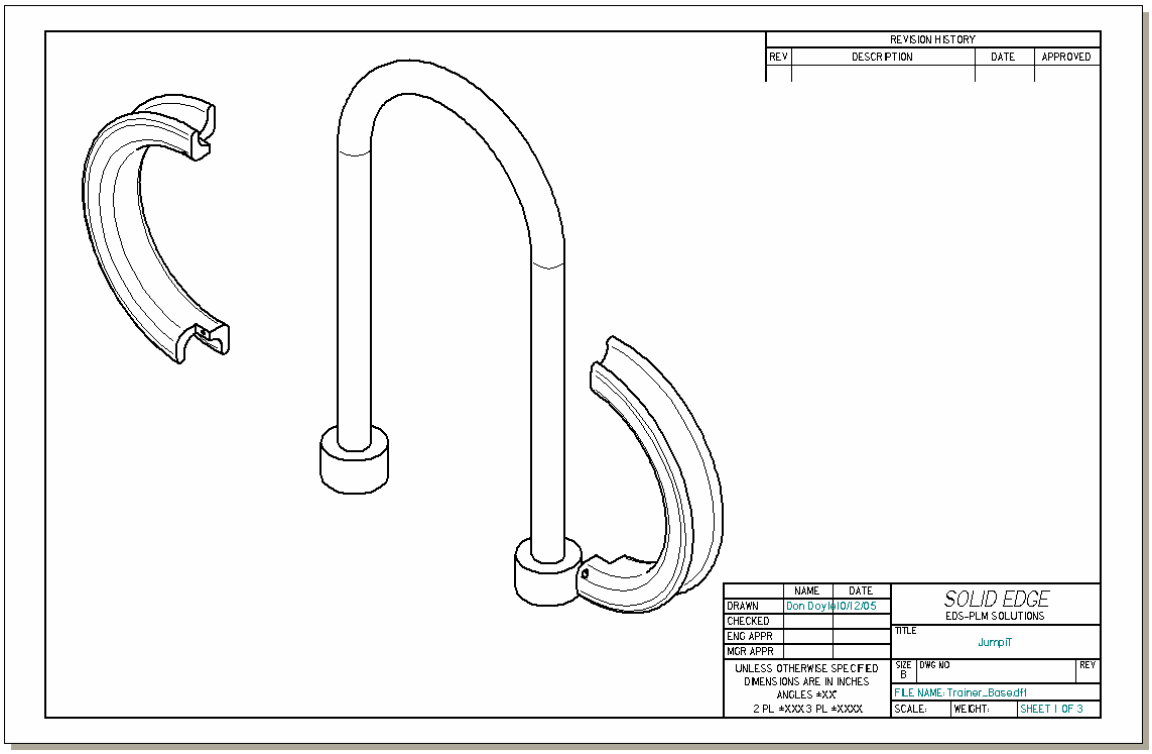

Figure 45 - JumpiT Control Drawing 1

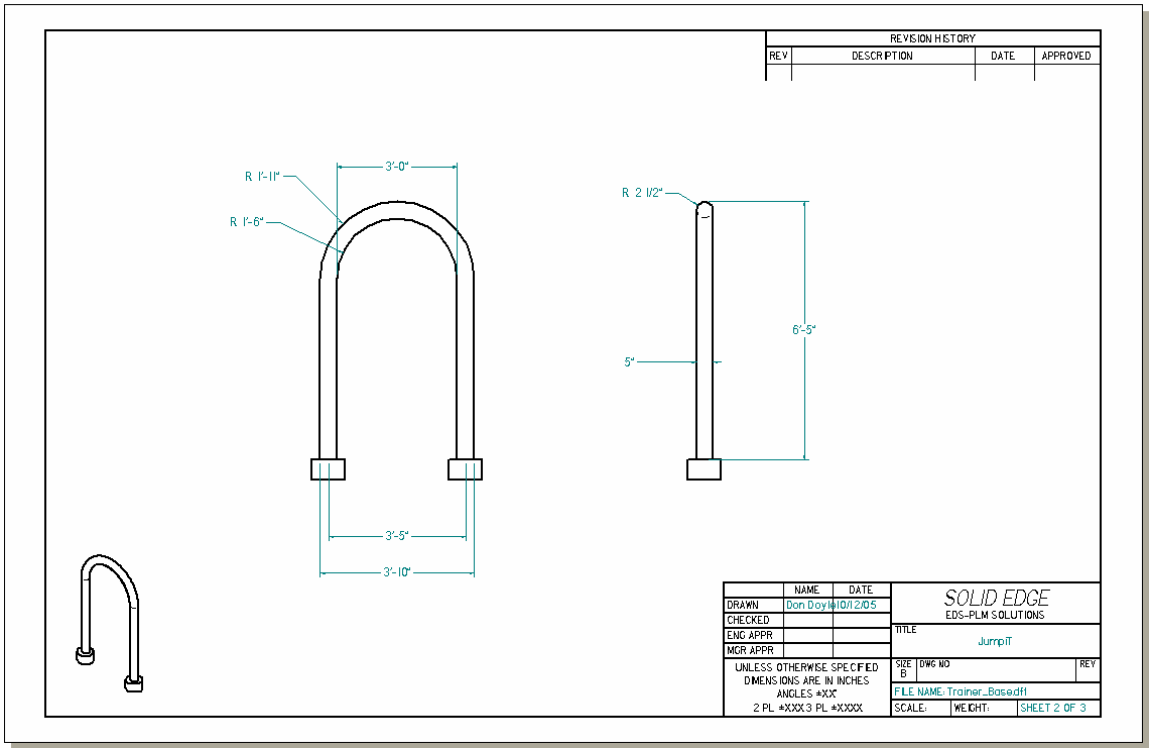

Figure 46 - JumoiT Control Drawing 2

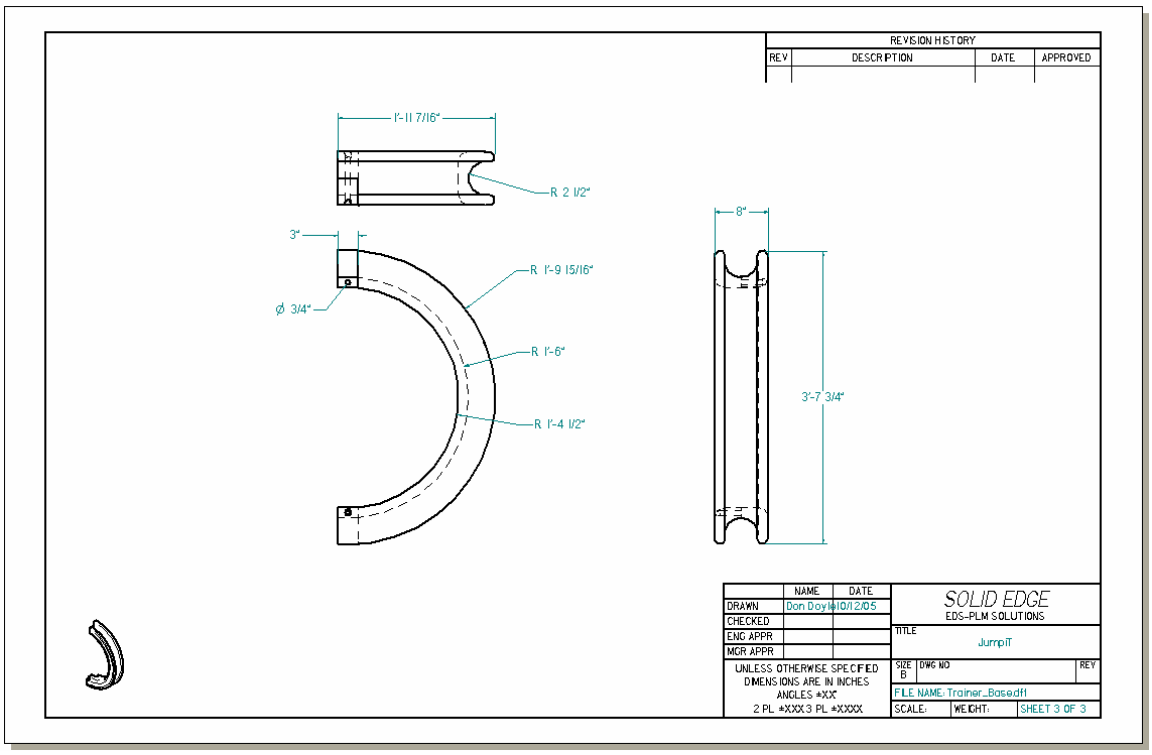

Figure 47 - JumpiT Control Drawing 3

MarkiT Control Drawings

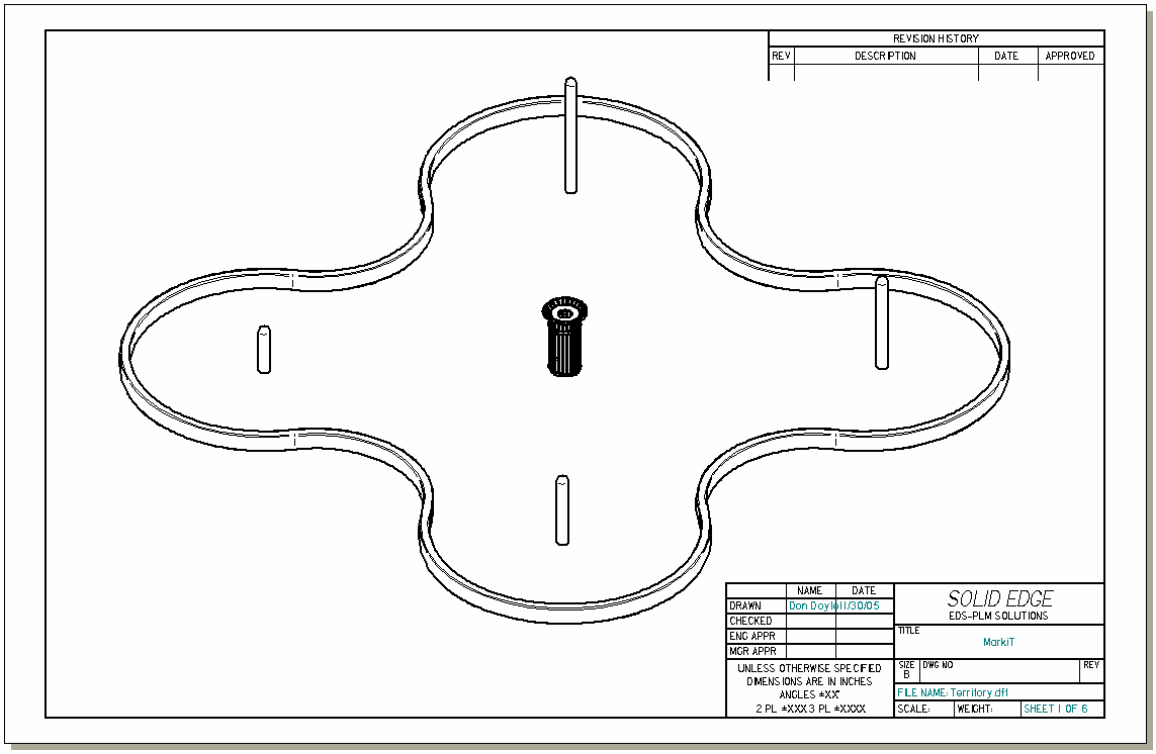

Figure 48 - MarkiT Control Drawing 1

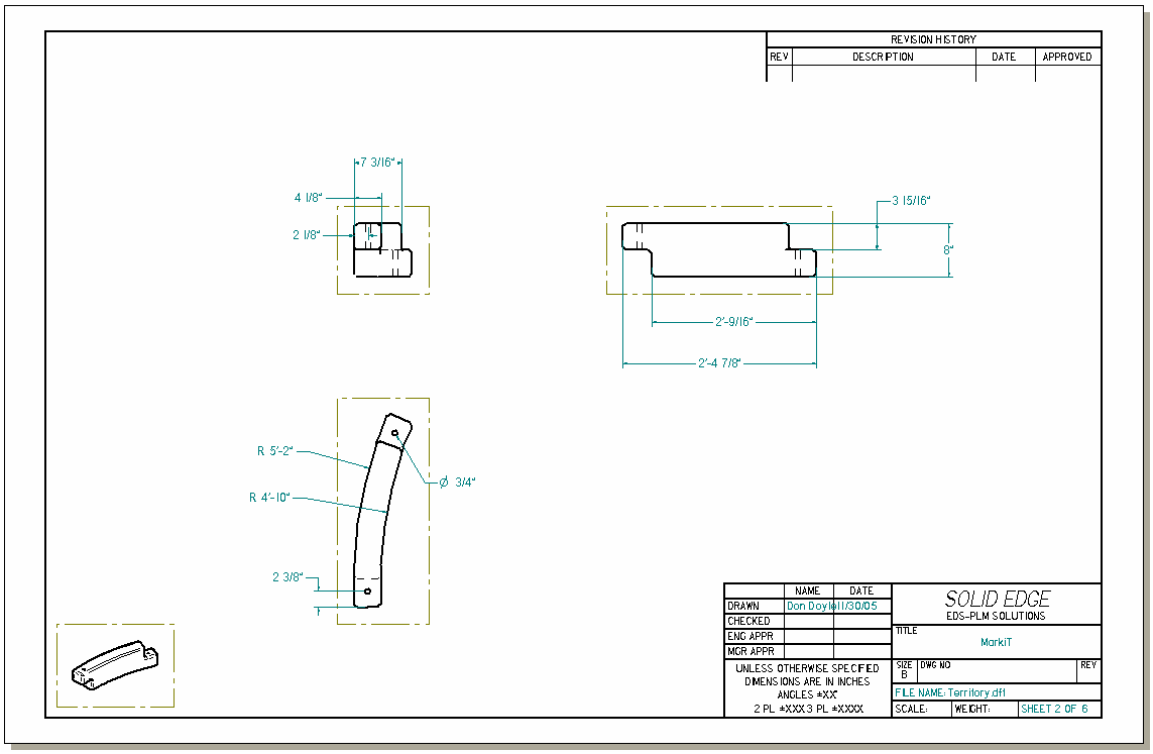

Figure 49 - MarkiT Control Drawing 2

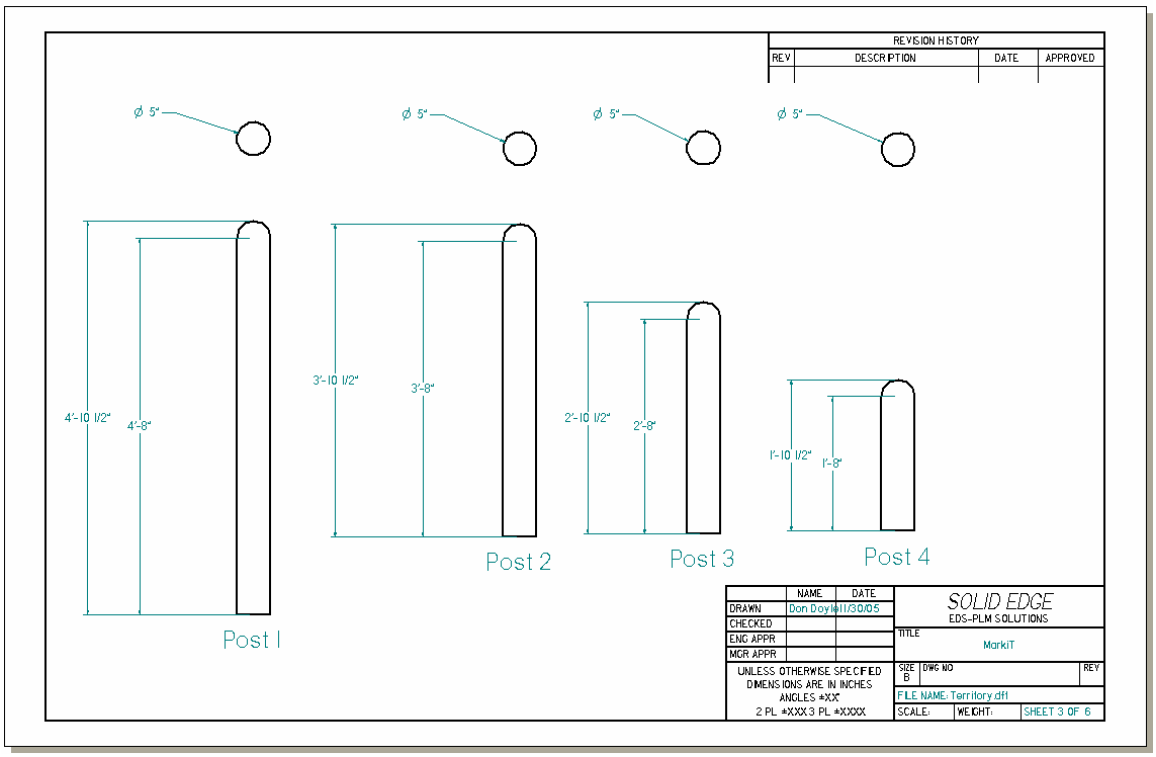

Figure 50 - MarkiT Control Drawing 3

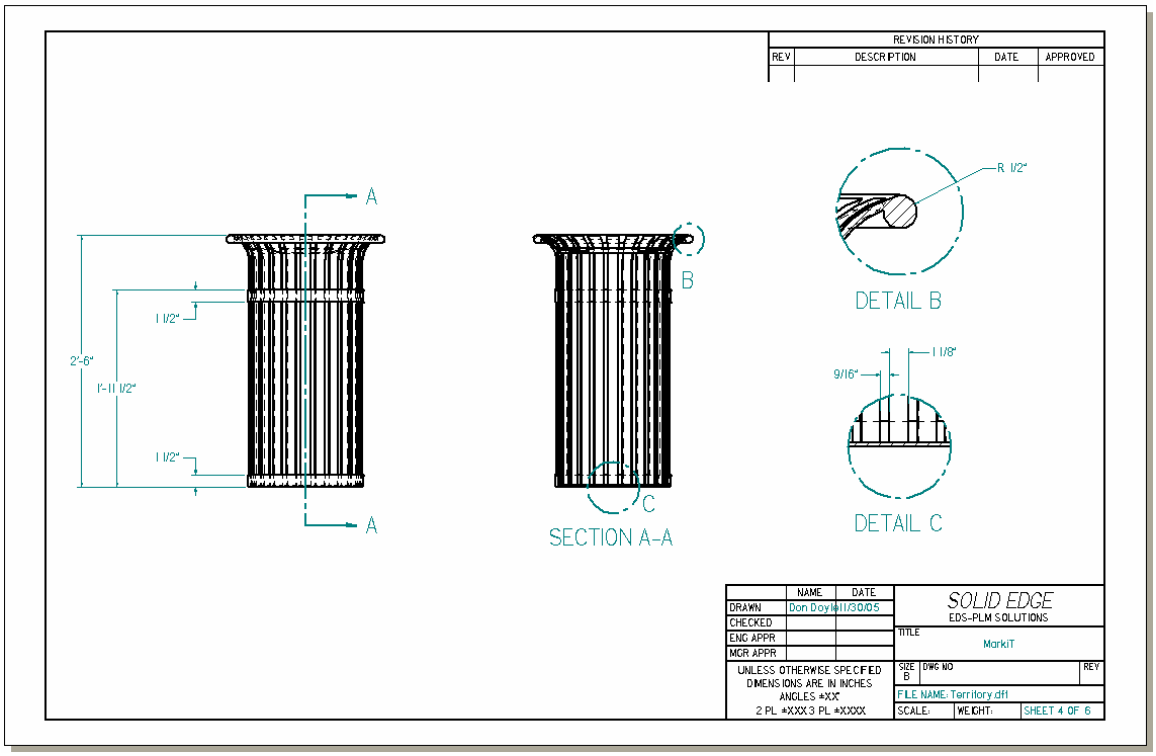

Figure 51 - MarkiT Control Drawing 4

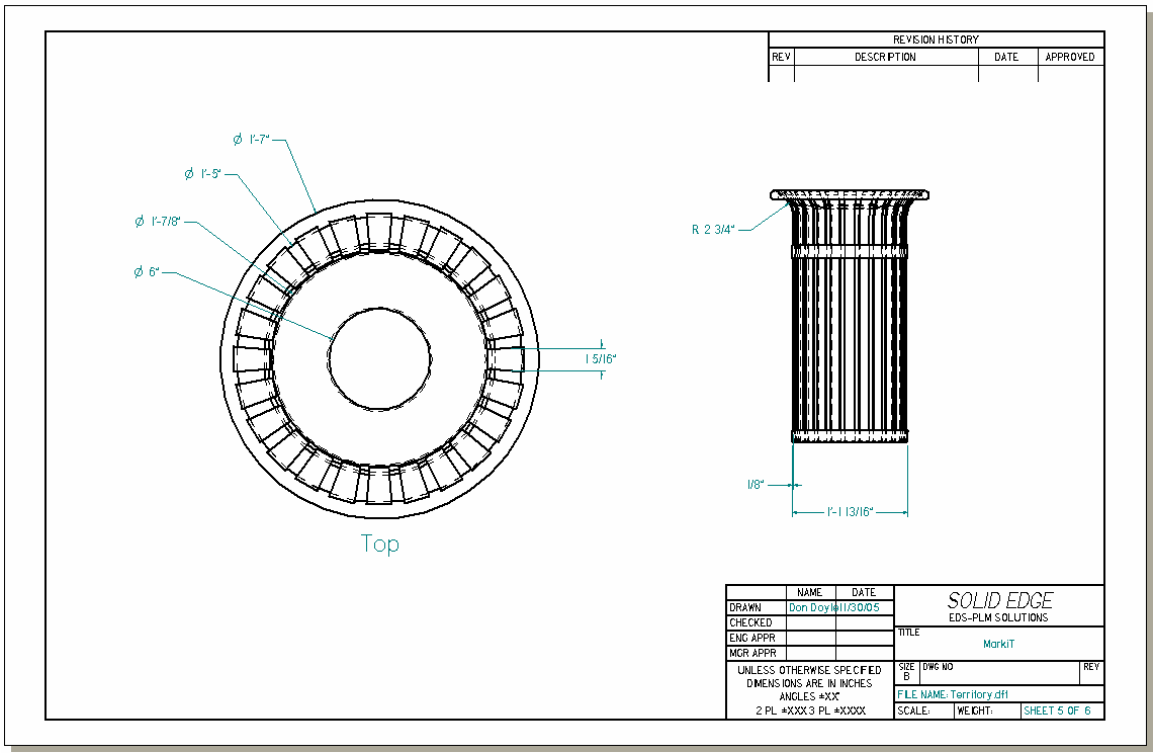

Figure 52 - MarkiT Control Drawing 5

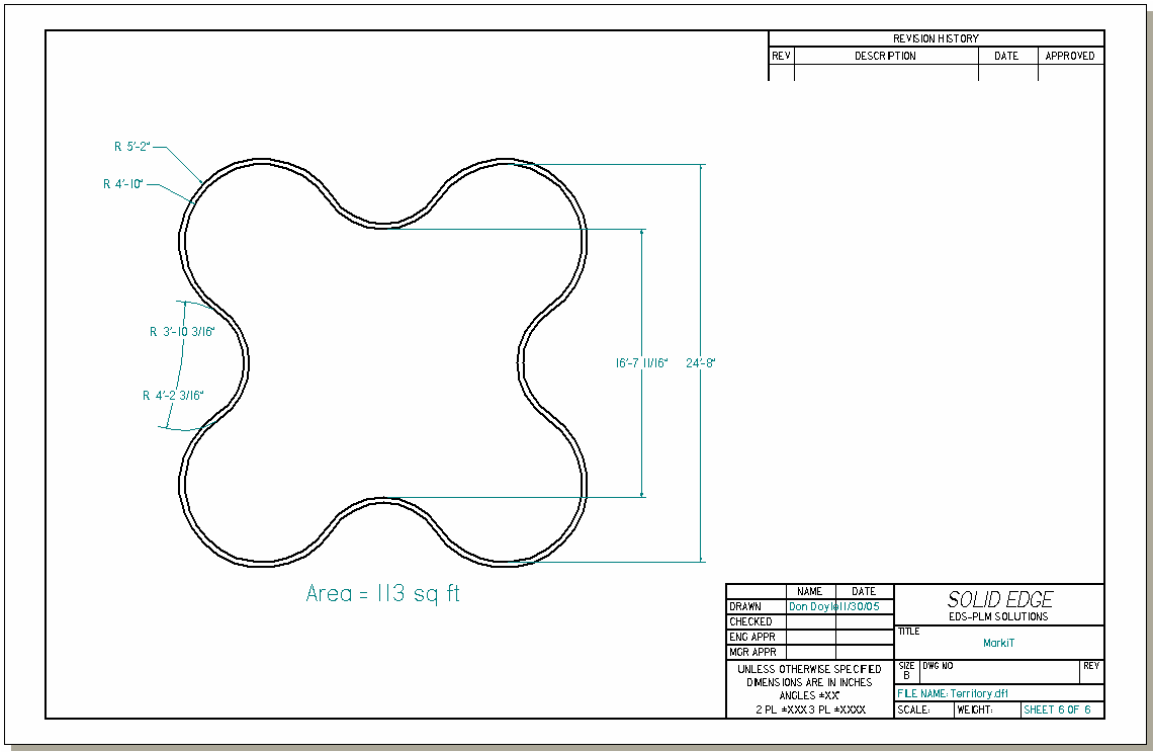

Figure 53 - MarkiT Control Drawing 6

GetiT Control Drawings

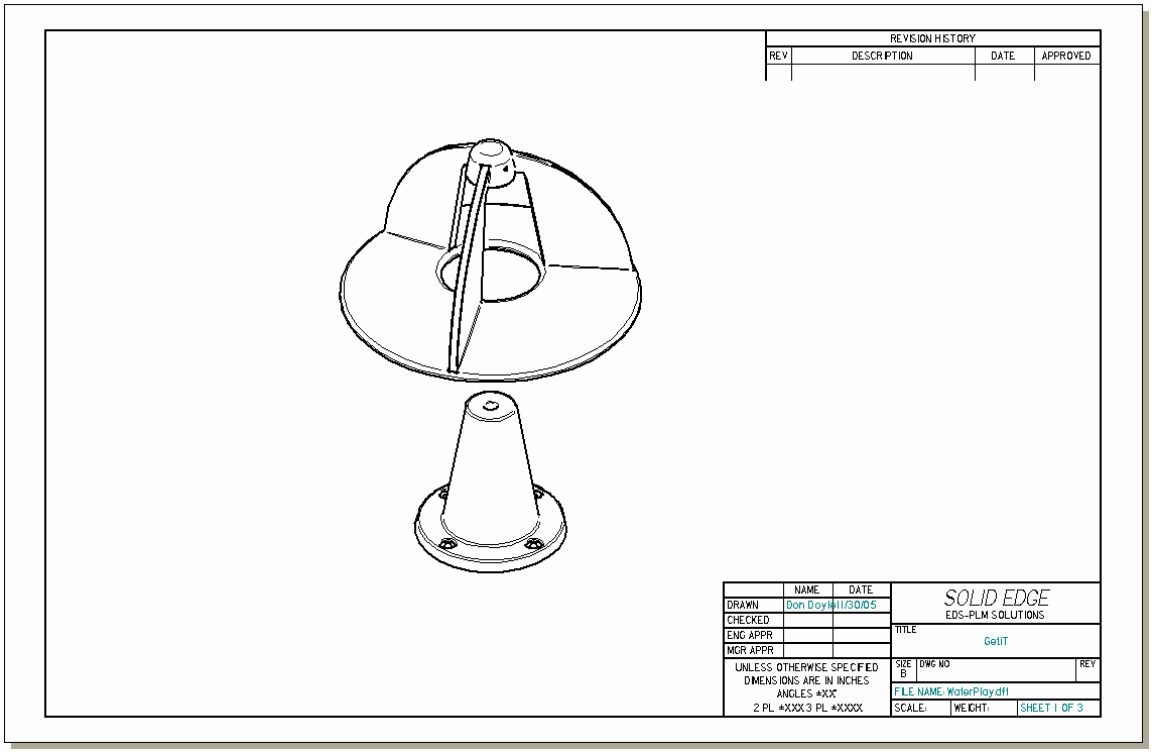

Figure 54 - GetiT Control Drawing 1

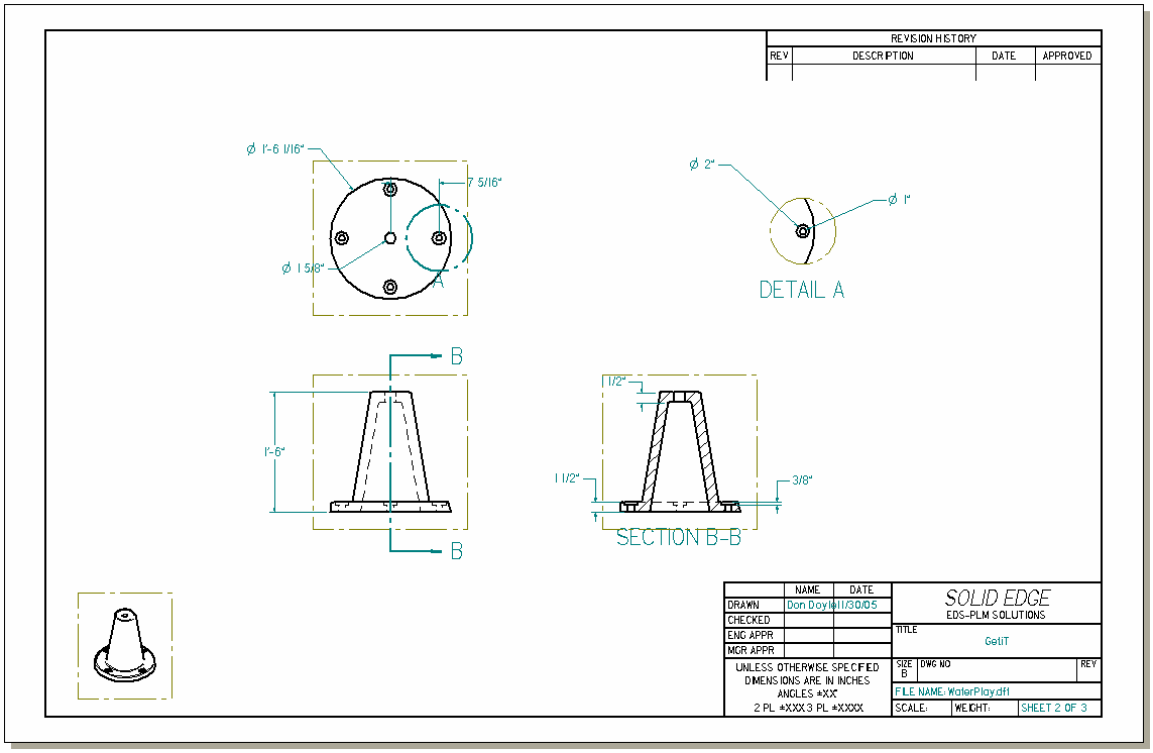

Figure 55 - GetiT Control Drawing 2

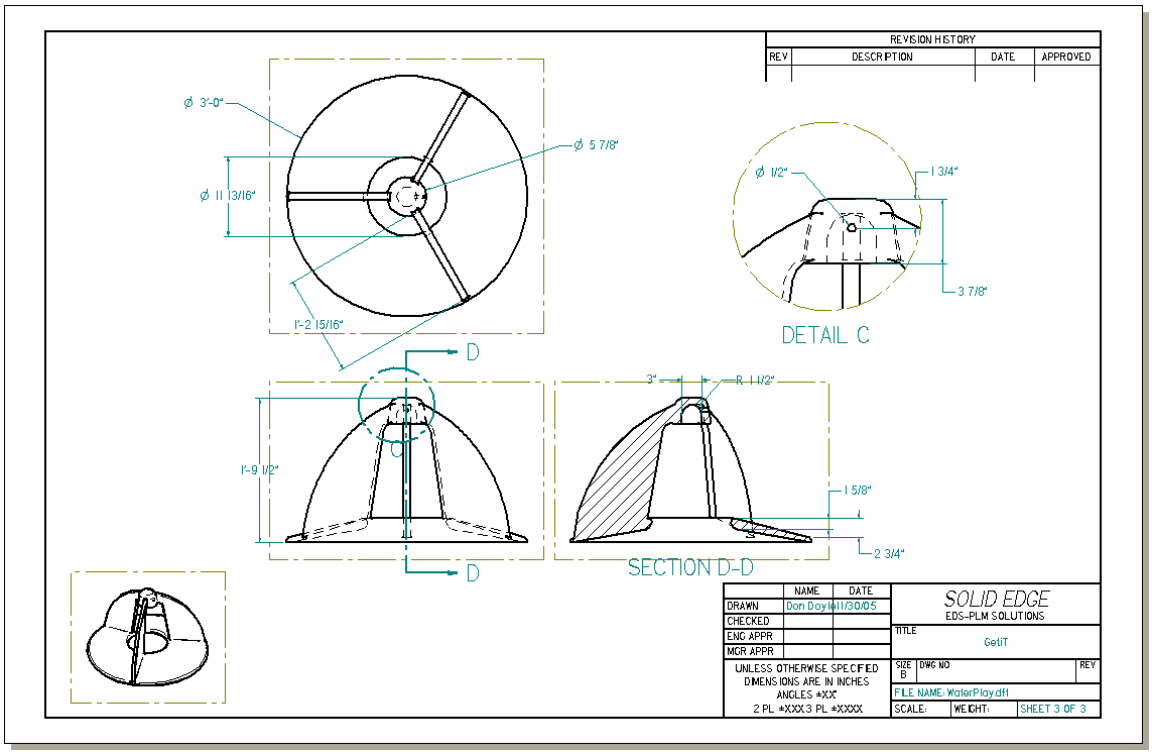

Figure 56 - GetiT Control Drawing 3

4.4.3 FINAL MODELS

All final models were created at 1/12th of the actual scale and presented in a way that shows how they would be assembled at a dog park. Included with each final model is the percentage of the dog population each particular product represents, and how each product would be produced and assembled.

Figure 57 (below) shows the final model for DigiT which is a digging and retrieving game that allows the owner and pet to play together. DigiT represents 39% of the current breed population within America. DigiT's frame is set into the ground with concrete with the walking surface and sandbox walls being bolted to it.

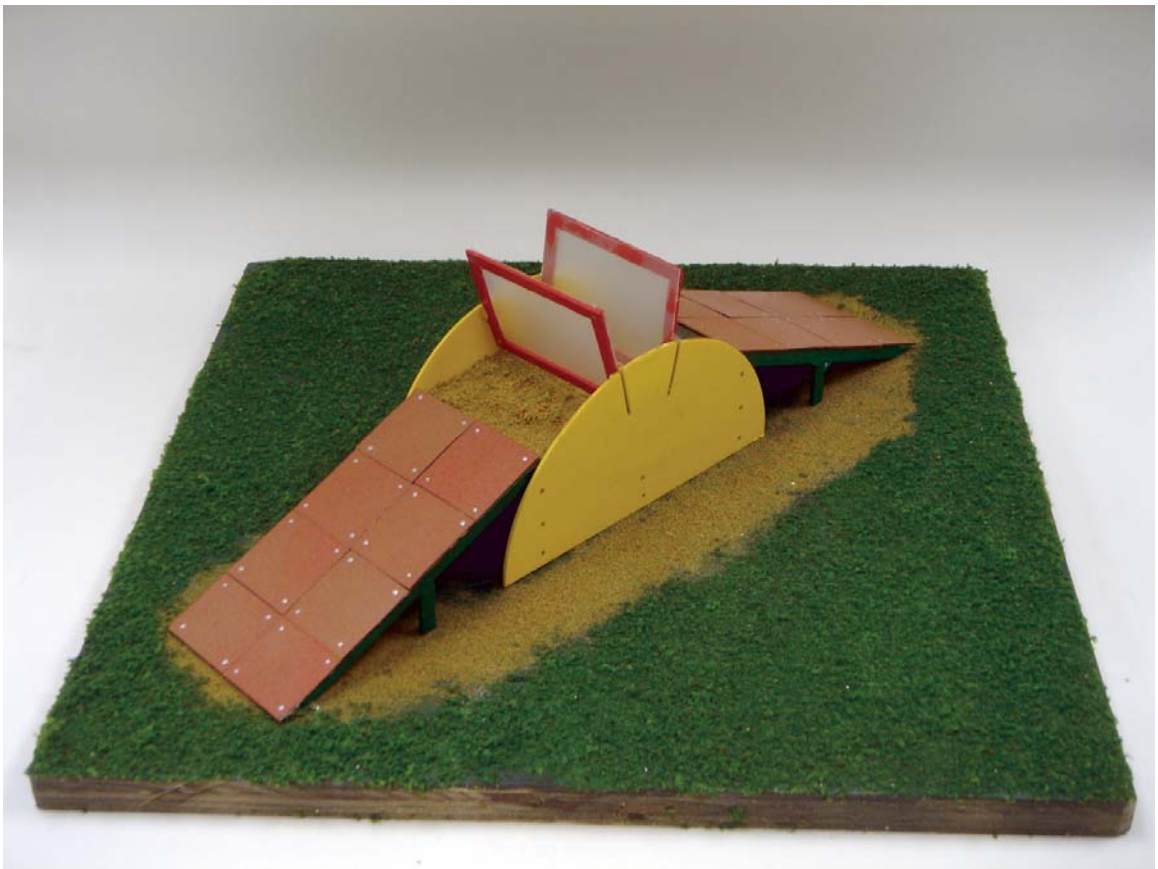

Figure 57 - DigiT Final Model (1:12 scale)

The basket, made of high density polyethylene and acrylic, allows the dog to see where the toy has been thrown.

ClimbiT represents 33% of the American breed population which includes most of the medium to small breeds such as the Shih Tzu and Jack Russell Terrier. ClimbiT is made from rotational molded plastic and is intended to be assembled on-site by bolting the stackers onto the bases, which are staked into the ground. The purple stacker, shown in Figure 58 (below), can be bolted to the orange stacker increasing the height of ClimbiT in eight inch increments.

Figure 58 - ClimbiT Final Model (1:12 scale)

Figure 59 (below) shows the final models for SwingiT and TugiT as separate products. SwingiT, which represents 15% of the breed population, is assembled by setting two five inch, powder coated, capped poles into the ground. These poles are then joined by a cross beam that holds the swing assembly. The SwingiT toy would be made by over-molding a cable with a nontoxic plastic that can be passed by a dog that ingests it. TugiT represents 16% of the dog population and is assembled by setting the crossbar into the ground with concrete. The high density plastic panels are then bolted to the crossbar. The tug toys used in TugiT can be removed and replaced by removing the red panel. The toys used in TugiT can be made from braided rope or nontoxic plastic, like the toy used in SwingiT.

Figure 59 - SwingiT and TugiT Final Models (1:12 scale)

JumpiT, shown in Figure 60 (below), is assembled by setting the yellow crossbar into the ground with concrete. The adjustable hurdle is two rotational molded parts that are bolted together between the crossbars. If the adjustable hurdle ever loses its ability to stay in position it can be replaced by removing the bolts holding it together. JumpiT represents 13% of the American breed population. This number is a good reference to what population current dog park equipment represent since it imitates activities common to agility training courses.

Figure 60 - JumpiT Final Model (1:12 scale)

MarkiT, shown in Figure 61 (below), represents the highest population of dogs in America, and there are very few exceptions that keep this product from being used by all dogs. The materials and assemblies in this final model are all used by PlayCore. The curbing that creates the shape of the space is made from a rotational molded plastic and is staked into the ground. The vertical poles are five inch, powder coated, capped tubing and the waist receptacle is a product used in commercial playgrounds.

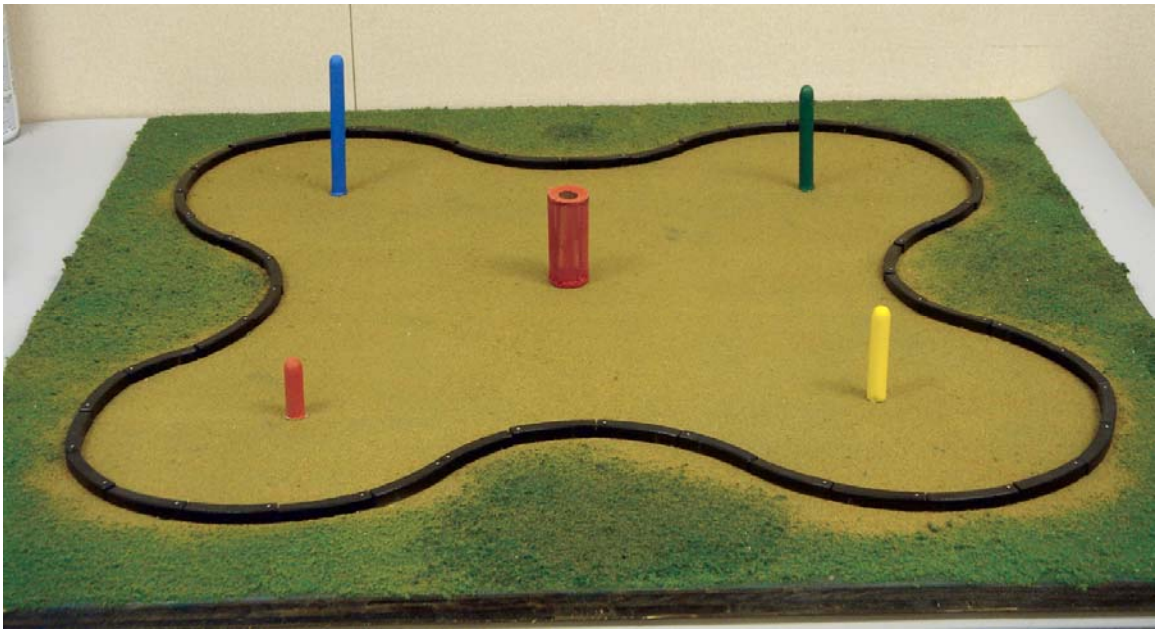

Figure 61 - MarkiT Final Model (1:12 scale)

Figure 62 (below) shows how two GetiT water chasing systems could be installed on a sprinkler system. Using a rotor attachment, the base is set over the sprinkler nozzle and staked into the ground. The spout cover is then attached to the sprinkler nozzle and is able to rotate 360 degrees when contacted by a person or their pet. Among the previous seven products, GetiT represents the largest population of American, registered breeds, 55%. By imitating the action of scurrying vermin and birds, GetiT creates instinctual activities common to the ratting, hunting, tracking and retrieving breeds.

Figure 62 - GetiT Final Model (1:12 scale)

CHAPTER 5: CONCLUSIONS

5.1 SUMMARY OF STUDY

Chapter One gave an introduction into the design problem that is the basis for this study. Also included in the first chapter is an overview of the need for this study as well as objectives, assumptions, scope and limits, and anticipated outcome of the study. Along with the procedures and goals of this documentation are the procedures by which said goals are to be accomplished.

Chapter Two is a precursor into the theory behind the design approach formulated during this study. The concept of canine size variation, breed specific design, and designing for owner and pet interaction are explained, in detail, to give the reader a better understanding into the thought behind the new approach. Each section is sub-divided and discussed further to give these theories validity and purpose.

Chapter Three describes the new design approach I have formulated while creating this document. It discusses the overall concepts and theories as well as their importance in the successful design of dog park equipment that better represent current dog populations. This chapter also provides the designer with a step-by-step guideline for creating new and innovative dog park amenities.

Chapter Four documents the application of the new approach by illustrating the processes I completed. Through the use of tables and figures, the reader can follow

each step in the design and production of dog park equipment in an order similar to an industrial design methodology.

5.2 RECOMMENDATIONS

Researching the size, weight, and habits of every dog breed can be overwhelming, so the information within this text is very broad and lacks in fine detail. For this reason, it is recommended, when designing for a specific breed, that the designer research that breed more in depth. The system by which I applied the new design approach is a methodology used by industrial design students at Auburn University and is not considered the only way to apply the approach to the design of dog park equipment. Each designer should use the methodology that is comfortable and most productive for him or her.

5.3 SYNOPSIS

Although this study is intended to aid in the design of innovative dog park equipment that represents a larger population of dogs in America, there are also other implications set forth in this text. The use of this document, and all research recorded in it, may also be of use when planning a future dog park. With all of the statistics included in previous chapters as well as the appendix, this document could be used as a reference guide for deciding the location and overall look of future dog parks.

BIBLIOGRAPHY/REFERENCES

Books

Alexander, R. Mcn. And G. Goldspink. Mechanics and Energetics of Animal Locomotion. London: Chapman and Hall, 1977.

Bergler, Reinhold. Man and Dog. Oxford; London: Blackwell Scientific Publications, 1983.

Bloomberg, Mark S., Jon F. Dee and Robert A. Taylor. Canine Sports Medicine and Surgery. Philadelphia, PA: W.B. Saunders Company, 1998.

Borelli, Giovanni Alfonso. On the Movement of Animals. Berlin; Heidelberg: Springer-Verlag, 1989.

Cartledge, Joe. The Dog Directory: Fourth Edition. Bracknell, Berks: The Dog Directory, 1977.

Davis, Henry P.. The Modern Dog Encyclopedia. Pennsylvania: The Stackpole Company, 1956.

Elliot, Rachel Page. The New Dogsteps. New York: Howell Book House Inc., 1983.

Geary, Michael. Rand McNally Pictorial Encyclopedia of Dogs. Rand McNally & Company, 1979.

Green, W.S. and P.W. Jordan. Human Factors in Product Design: Current Practices and Future Trends. London: Taylor & Francis, 1999.

Miller, Nelson. Retail Pet Supply Manual. New York: Harcourt Brace Jovanovich, 1976.

Nicholas, Barbara. The Portable Pet. Boston, Massachusetts: The Harvard Common Press, 1983.

Royal Canin. The Royal Canin Dog Encyclopedia. Paris: Aniwa Publishing, 2001.

Publications

How Do We Love Thee?. Published by Pace Communications Inc. Greensboro, North Carolina

U.S. Pet Ownership & Demographic Sourcebook (2002 Edition). Published by American Veterinary Medical Association. Schaumburg, Illinois

Websites

www.cityofsouthlake.com/recreation/special%20events/booboobudies

www.dogpark.com

www.dogplay.com

www.dogwoodpark.com/agility

www.petstreetmall.com/dog_agility_equipment

www.akc.org/breeds

APPENDIX

Dog Breeds – By Registered Population

	Number Registered	Rank
	2001	2001
Labrador Retriever	165,970	1
Golden Retriever	62,497	2
German Shepherd Dog	51,625	3
Dachshund	50,478	4
Beagle	50,419	5
Yorkshire Terrier	42,025	6
Poodle	40,550	7
Boxer	37,035	8
Chihuahua	36,627	9
Shih Tzu	33,240	10
Rottweiler	29,269	11
Pomeranian	28,495	12
Miniature Schnauzer	27,587	13
Cocker Spaniel	25,445	14
Pug	23,769	15
Shetland Sheepdog	20,899	16
Miniature Pinscher	19,072	17
Boston Terrier	18,100	18
Bulldog	15,501	19
Maltese	15,214	20
Siberian Husky	14,915	21
German Shorthaired Pointer	12,884	22
Basset Hound	12,850	23
Doberman Pinscher	12,570	24
Bichon Frise	10,969	25
Pembroke Welsh Corgi	10,344	26
English Springer Spaniel	10,180	27
Great Dane	9,629	28
Weimaraner	8,964	29
West Highland White Terrier	8,716	30
Brittany	8,465	31
Pekingese	7,798	32
Collie	7,340	33

Lhasa Apso	6,584	34
Australian Shepherd	6,158	35
Saint Bernard	5,722	36
Mastiff	5,434	37
Chinese Shar-Pei	5,416	38
Akita	4,904	39
Papillon	4,438	40
Chesapeake Bay Retriever	4,400	41
Cairn Terrier	4,333	42
Scottish Terrier	3,958	43
Cavalier King Charles Spaniel	3,612	44
Vizsla	3,235	45
Airedale Terrier	3,055	46
Great Pyrenees	3,033	47
Bloodhound	3,010	48
Bullmastiff	2,987	49
Newfoundland	2,911	50
Italian Greyhound	2,892	51
Chow Chow	2,811	52
Alaskan Malamute	2,753	53
Bernese Mountain Dog	2,474	54
Shiba Inu	2,434	55
Soft coated Wheaten Terrier	2,409	56
Rhodesian Ridgeback	2,351	57
Dalmation	2,139	58
Irish Setter	1,905	59
Silky Terrier	1,889	60
Border Collie	1,796	61
Chinese Crested	1,790	62
American Staffordshire Terrier	1,761	63
French Bulldog	1,727	64
Schipperke	1,703	65
Samoyed	1,698	66
Whippet	1,685	67
Old English Sheepdog	1,590	68
Wire Fox Terrier	1,536	69
Jack Russel Terrier	1,533	70
Basenji	1,420	71
Australian Cattle Dog	1,418	72
German Wirehaired Pointer	1,333	73
Japanese Chin	1,300	74
Havanese	1,272	75
English Cocker Spaniel	1,228	76

Brussels Griffon	1,177	77
Portuguese Water Dog	1,098	78
Keeshonden	1,086	79
Bull Terrier	1,072	80
Bouvier des Flandres	1,044	81
Giant Schnauzer	1,038	82
Norwegian Elkhound	974	83
Gordon Setter	965	84
Cardigan Welsh Corgi	919	85
Irish Wolfhound	860	86
Border Terrier	812	87
Borzoi	744	88
English Setter	721	89
Afghan Hound	684	90
Tibetan Terrier	675	91
Welsh Terrier	673	92
Smooth Fox Terrier	669	93
Belgian Malinois	647	94
Staffordshire Bull	630	95
Bearded Collie	320	96
Standard Schnauzer	597	97
Flat-Coated Retriever	554	98
Norwich Terrier	522	99
Pointer	519	100
Greater Swiss Mountain Dog	509	101
Tibetan Spaniel	488	102
Toy Fox Terrier	488	103
American Eskimo Dog	482	104
Australian Terrier	476	105
Manchester Terrier	455	106
Belgian Tervuren	454	107
Saluki	415	108
Belgian Sheepdog	405	109
Kerry Blue Terrier	395	110
Irish Terrier	330	111
Petit Basset Griffon Vendeen	289	112
Welsh Springer Spaniel	283	113
Briard	276	114
Norfolk Terrier	273	115
Wirehaired Pointing Griffon	241	116
English Toy Spaniel	236	117
Affenpinscher	229	118
Bedlington Terrier	203	119
Anatolian Shepherd Dog	202	120

Clumber Spaniel	198	121
Scottish Deerhound	191	122
Spinone Italiano	180	123
Greyhound	179	124
American water Spaniel	166	125
Black and Tan Coonhound	160	126
Lakeland Terrier	157	127
Kuvasok	154	128
Polish Lowland Sheepdog	149	129
Curly-Coated Retriever	136	130
Puli	134	131
Irish Water Spaniel	126	132
Miniature Bull Terrier	126	133
Field Spaniel	125	134
Lowchen	122	135
Pharaoh Hound	113	136
Plotts	92	137
Finnish Spitz	91	138
German Pinscher	89	139
Caanan Dog	88	140
Skye Terrier	84	141
Komondor	83	142
Ibizan Hound	82	143
Dandie Dinmont Terrier	75	144
Sealyham Terrier	70	145
Harrier	58	146
English Foxhound	57	147
Sussex Spaniel	56	148
American Foxhound	52	149
Otterhound	35	150

American Veterinary Medical Association

AKC Breeds by Group

Sporting Group

Naturally active and alert, Sporting dogs make likeable, well-rounded companions. Members of the Group include pointers, retrievers, setters and spaniels. Remarkable for their instincts in water and woods, many of these breeds actively continue to participate in hunting and other field activities. Potential owners of Sporting dogs need to realize that most require regular, invigorating exercise.


American Water Spaniel


Brittany


Chesapeake Bay Retriever


Clumber Spaniel


Cocker Spaniel


Curly-Coated Retriever


English Cocker Spaniel


English Setter


English Springer Spaniel


Field Spaniel


Flat-Coated Retriever


German Shorthaired Pointer


German Wirehaired Pointer


Golden Retriever


Gordon Setter


Irish Setter


Irish Water Spaniel


Labrador Retriever


Nova Scotia Duck Tolling Retriever


Pointer


Spinone Italiano


Sussex Spaniel


Vizsla


Weimaraner


Welsh Springer Spaniel


Wirehaired Pointing Griffon

Hound Group

Most hounds share the common ancestral trait of being used for hunting. Some use acute scenting powers to follow a trail. Others demonstrate a phenomenal gift of stamina as they relentlessly run down quarry. Beyond this, however, generalizations about hounds are hard to come by, since the Group encompasses quite a diverse lot. There are Pharaoh Hounds, Norwegian Elkhounds, Afghans and Beagles, among others. Some hounds share the distinct ability to produce a unique sound known as baying. You'd best sample this sound before you decide to get a hound of your own to be sure it's your cup of tea.


Afghan Hound


American Foxhound


Basenji


Basset Hound


Beagle


Black and Tan Coonhound


Bloodhound


Borzoi


Dachshund


English Foxhound


Greyhound


Harrier


Ibizan Hound


Irish Wolfhound


Norwegian Elkhound


Otterhound


Petit Basset
Griffon Vendéen


Pharaoh Hound


Rhodesian Ridgeback


Saluki


Scottish Deerhound


Whippet

Working Group

Dogs of the Working Group were bred to perform such jobs as guarding property, pulling sleds and performing water rescues. They have been invaluable assets to man throughout the ages. The Doberman Pinscher, Siberian Husky and Great Dane are included in this Group, to name just a few. Quick to learn, these intelligent, capable animals make solid companions. Their considerable dimensions and strength alone, however, make many working dogs unsuitable as pets for average families. And again, by virtue of their size alone, these dogs must be properly trained.


Akita


Alaskan Malamute


Anatolian
Shepherd Dog


Bernese
Mountain Dog


Black Russian Terrier


Boxer


Bullmastiff


Doberman Pinscher


German Pinscher


Giant Schnauzer


Great Dane


Great Pyrenees


Greater Swiss Mountain Dog


Komondor


Kuvasz


Mastiff


Neapolitan Mastiff


Newfoundland


Portuguese Water Dog


Rottweiler


Saint Bernard


Samoyed


Siberian Husky


Standard Schnauzer

Terrier Group

People familiar with this Group invariably comment on the distinctive terrier personality. These are feisty, energetic dogs whose sizes range from fairly small, as in the Norfolk, Cairn or West Highland White Terrier, to the grand Airedale Terrier. Terriers typically have little tolerance for other animals, including other dogs. Their ancestors were bred to hunt and kill vermin. Many continue to project the attitude that they're always eager for a spirited argument. Most terriers have wiry coats that require special grooming known as stripping in order to maintain a characteristic appearance. In general, they make engaging pets, but require owners with the determination to match their dogs' lively characters.

Airedale Terrier

American Staffordshire Terrier

Australian Terrier

Bedlington Terrier

Border Terrier

Bull Terrier

Cairn Terrier

Dandie Dinmont Terrier

Glen of Imaal Terrier

Irish Terrier

Kerry Blue Terrier

Lakeland Terrier

Manchester Terrier

Miniature Bull Terrier

Miniature Schnauzer

Norfolk Terrier

Norwich Terrier

Parson Russell Terrier

Scottish Terrier

Sealyham Terrier

Skye Terrier

Smooth Fox Terrier

Soft Coated Wheaten Terrier

Staffordshire Bull Terrier

Welsh Terrier

West Highland White Terrier

Wire Fox Terrier

Toy Group

The diminutive size and winsome expressions of Toy dogs illustrate the main function of this Group: to embody sheer delight. Don't let their tiny stature fool you, though - - many Toys are tough as nails. If you haven't yet experienced the barking of an angry Chihuahua, for example, well, just wait. Toy dogs will always be popular with city dwellers and people without much living space. They make ideal apartment dogs and terrific lap warmers on nippy nights. (Incidentally, small breeds may be found in every Group, not just the Toy Group. We advise everyone to seriously consider getting a small breed, when appropriate, if for no other reason than to minimize some of the problems inherent in canines such as shedding, creating messes and cost of care. And training aside, it's still easier to control a ten-pound dog than it is one ten times that size.)

Affenpinscher

Brussels Griffon

Cavalier King Charles Spaniel

Chihuahua

Chinese Crested

English Toy Spaniel

Havanese

Italian Greyhound

Japanese Chin

Maltese

Manchester Terrier

Miniature Pinscher


Papillon


Pekingese


Pomeranian


Poodle


Pug


Shih Tzu


Silky Terrier


Toy Fox Terrier


Yorkshire Terrier

Non-Sporting Group

Non-sporting dogs are a diverse group. Here are sturdy animals with as different personalities and appearances as the Chow Chow, Dalmatian, French Bulldog, and Keeshond. Talk about differences in size, coat, and visage! Some, like the Schipperke and Tibetan Spaniel are uncommon sights in the average neighborhood. Others, however, like the Poodle and Lhasa Apso, have quite a large following. The breeds in the Non-Sporting Group are a varied collection in terms of size, coat, personality and overall appearance.


American Eskimo Dog


Bichon Frise


Boston Terrier


Bulldog


Chinese Shar-Pei


Chow Chow


Dalmatian


Finnish Spitz


French Bulldog


Keeshond


Lhasa Apso


Löwchen


Poodle


Schipperke


Shiba Inu


Tibetan Spaniel


Tibetan Terrier

Herding Group

The Herding Group, created in 1983, is the newest AKC classification; its members were formerly members of the Working Group. All breeds share the fabulous ability to control the movement of other animals. A remarkable example is the low-set Corgi, perhaps one foot tall at the shoulders, that can drive a herd of cows many times its size to pasture by leaping and nipping at their heels. The vast majority of Herding dogs, as household pets, never cross paths with a farm animal. Nevertheless, pure instinct prompts many of these dogs to gently herd their owners, especially the children of the family. In general, these intelligent dogs make excellent companions and respond beautifully to training exercises.


Australian Cattle Dog


Australian Shepherd


Bearded Collie


Belgian Malinois


Belgian Sheepdog


Belgian Tervuren


Border Collie


Bouvier des Flandres

Briard

Canaan Dog

Cardigan
Welsh Corgi

Collie

German
Shepherd Dog

Old English
Sheepdog

Pembroke
Welsh Corgi

Polish Lowland
Sheepdog

Puli

Shetland Sheepdog

Miscellaneous Class

Authorities acknowledge that throughout the world there are several hundred distinct breeds of purebred dogs, not all of which are AKC recognized breeds. Those officially recognized for AKC registration appear in the Stud Book of the American Kennel Club. The AKC provides for a regular path of development for a new breed, which may result in that breed's full recognition and appearance in the official Stud Book as an AKC recognized breed.

Briefly stated, the requirement for admission to the Stud Book is clear and categorical proof that a substantial, sustained nationwide interest and activity in the breed exists. This includes an active parent club, with serious and expanding breeding activity over a wide geographic area.

When in the judgment of the Board of Directors such interest and activity exists, a breed is admitted to the Miscellaneous Class. Breeds in the Miscellaneous Class may compete and earn titles in AKC Obedience, Tracking and Agility events. Miscellaneous breeds are also eligible to compete in Junior Showmanship. They may also compete at conformation shows, but here are limited to competition in the Miscellaneous Class and are not eligible for championship points.

When the Board of Directors is satisfied that a breed is continuing a healthy, dynamic growth in the Miscellaneous Class, it may be admitted to registration in the Stud Book and the opportunity to compete in regular classes.

Beauceron

Plott

Redbone Coonhound

Swedish Vallhund

Tibetan Mastiff

Dog Breed Activity Sets – By Alphabetical Order

Affenpinscher:

The affenpinscher is a hunter of vermin and an excellent guard dog that will bark a warning to alert his owner.

This breed can make a good house dog. Daily brushing and combing is required.

- Guard dog.
- Hunter of vermin.
- Pet.

Afghan Hound:

The afghan hound was used in his native land as a watchdog and hunter of antelope, wolf, jackal and other game.

He can adapt to apartment life as long as he has space and lots of exercise. He requires daily brushing and combing, as well as a monthly bath and grooming two or three times a year.

- Hunting dog.
- Companion dog.

Airedale Terrier:

The Airedale has many skills. He is a strong swimmer and is used to hunt ducks and otter as well as boar and deer.

If the Airedale is to be kept as a house dog, he must have long walks every day. Brushing two times per week is required. This breed should be professionally groomed three times per year.

- Hunting dog, ratter.
- Guard dog.
- Utility dog: police dog, tracker, guide dog, army dog.
- Pet.

Akita:

This very sporting breed can adapt to life as a house dog only if he gets a lot of exercise every day. Daily brushing is required. A curry brush is recommended during seasonal shedding.

- Guard dog.
- Utility dog: police dog, guide dog.
- Pet.

Alaskan Malamute:

The Alaskan malamute could possibly adapt to life in the city, but this dog does not like to be left alone and hates inactivity. If closed in, he will destroy a house. To maintain mental and physical health, this dog must take long, frequent walks and, if possible, be allowed to pull loads. This breed does not tolerate heat well. Brushing twice per week is required. A curry comb is needed during seasonal shedding.

- Sled dog (heavy loads over long distances).
- Pet.

American Eskimo Dog:

The American Eskimo is a bright, alert, intelligent dog that is perfectly willing to guard his family when necessary. The dog has a high energy level and can be noisy or destructive if not given enough to do. A well-bred Eskie is a fine city dog as long as he gets a daily walk. His enjoyment of human company, his owner's and others', and his penchant for learning tricks and playing games make him a fine companion for a moderately active family.

American Foxhound:

American foxhounds have melodic voice and hunt fox and wild boar. They make excellent companions.

American foxhounds need lots of exercise and regular brushing.

- Hunting dog.
- Companion dog.

American Staffordshire Terrier:

It is necessary to socialize this breed well and not develop its aggressive, biting tendencies or the result will be a fearsome "weapon".

Life as a house dog is not ideal for this breed, which requires considerable exercise and space to maintain mental health. Brushing once or twice per week is all that is required to maintain the coat.

- Guard dog.
- Pet.
- Baiting.

American Water Spaniel:

This dog has great endurance and is an enthusiastic hunter of game birds. He is a very good swimmer and is also used as a retriever. He is an affectionate pet.

He need space and lots of exercise, as well as daily combing and brushing.

- Hunting dog.
- Companion dog.

Anatolian Shepherd Dog:

His habit of living and working outdoors in all weather conditions and his rugged past make this a sturdy, hardy breed.

The Anatolian shepherd should live in the country where he can get the vigorous daily exercise that he requires. Regular brushing is sufficient.

- Flock guard.
- Guard dog.
- Pet.

Australian Cattle Dog:

This dynamic dog is always on the alert. Courageous and vigilant, he was born to the life of herding and guarding cattle.

This dog is not a city dweller. If forced to live indoors. He will get into mischief for lack of space or adequate activity. The Australian cattle dog needs considerable exercise every day. Regular brushing is sufficient.

- Herder, herd guard, cattle dog.
- Guard dog.

Australian Shepherd:

This exceptional herder also guards the farm. Affectionate, gentle, good-natured, and very loyal, the Australian shepherd makes a good pet.

This dog of almost unlimited energy is made for wide-open spaces. He should not be kept in enclosed spaces and is not made for life indoors. Regular brushing is sufficient.

- Herder
- Guard dog
- Pet.

Australian Terrier:

This active dog needs plenty of exercise. Daily brushing is required.

- Hunting dog.
- Pet.

Basenji:

Blessed with an excellent sense of smell, the basenji is used as a senthound. Like cats, he likes high perches.

The basenji can adapt to city living provided he gets out daily for a walk. This breed does not like to be left alone. If left in the house alone, he may become destructive.

- Hunting dog (small game)
- Utility dog: bush guide.
- Guard dog.
- Pet.

Basset Hound:

He is a skilled pack hound, trailing small and medium-sized game. Affectionate and gentle, he is a prized family friend.

This athlete needs space and lots of exercise. He does not tolerate solitude or heat very well. He requires regular brushing and attention to the ears and eyes.

- Hunting dog.
- Companion dog.

Beagle:

This small, versatile pack hound hunts hare, rabbit, fox, deer and wild boar.

The beagle can adapt to city life but needs lots of space to let off steam. He must be brushed once or twice weekly and his ears need regular attention.

- Hunting dog.
- Companion dog.

Bearded Collie:

The bearded collie, which becomes very attached to his owner and adores children, does not like to be left alone.

The bearded collie can adapt to being a house dog if he has many opportunities to go out and is not left alone. Regular brushing, at least twice per week, is required to keep his coat tangle-free.

- Pet.

Bedlington Terrier:

The bedlington terrier makes a good house dog, but he must be walked daily. Weekly brushing is required. This breed should be professionally groomed two or three times per year.

- Ratter
- Guard dog.
- Pet.

Belgian Malinois:

The malinois, which was chosen for guard dog and sporting activities at the end of the 19th century, is more assertive and has a stronger personality than the other calmer varieties because of its true sheepdog origins.

This breed needs peaceful surroundings and regular exercise to blossom.

- Sheepdog.
- Guard dog, police dog, good trackers, search-and-rescue.
- Pet.

Belgian Sheepdog:

He is very energetic, active and dynamic, and needs a lot of exercise. The Belgian sheepdog does not accept a leash.

Long-haired varieties require weekly brushing.

- Sheepdog.
- Guard dog.
- Pet.

Belgian Tervuren:

He is very energetic, active and dynamic, and needs a lot of exercise. The Belgian sheepdog does not accept a leash.

Long-haired varieties require weekly brushing.

- Sheepdog.
- Guard dog.
- Pet.

Bernese Mountain Dog:

The Bernese Mountain Dog does not like to be locked up in a house. He loves wide open spaces and exercise. Weekly brushing is sufficient.

- Herder (large animals)
- Guard dog, police dog, draft dog.
- Pet.

Bichon Frise:

He does well in an apartment but needs long walks and does not like being left alone. He requires daily brushing and monthly baths. The hair on his feet and muzzle should be trimmed and he should be groomed every three months. He hardly sheds and is very clean. His ears and eyes require regular attention.

- Companion dog.

Black and Tan Coonhound:

Very hardy, alert and lively, Coonhounds are vigilant and aggressive hunters. They require firm training.

They are not suited to apartment life and require regular brushing.

- Hunting dog.

Bloodhound:

He is skilled in tracking wounded game. In fact, his exceptionally keen nose makes him the very best tracking dog.

Despite his size, he can adapt to city life, but he needs lots of exercise. He also requires regular brushing.

- Hunting dog.
- Utility dog: manhunts.
- Companion dog.

Border Collie:

This dog is a sheepdog through and through and must remain such. His training starts around the age of six months and can last one or two years. He does not adapt well to urban living, though can adapt rather easily to life as a family pet. This tireless sheepdog requires daily exercise. No special grooming or other care is required.

- Sheepdog.

Border Terrier:

The border terrier can adapt to living indoors if he frequently gets out for long walks. Occasional brushing is all that is required to maintain the coat. Professional grooming is not required.

- Hunting dog.
- Pet.

Borzoi:

It is better not to keep him in an apartment or leave him alone for long periods. He needs a great deal of space and exercise. He must be kept on a leash on walks, because he may try to chase cats and other animals. He requires brushing two or three times a week.

- Hunting dog.
- Watchdog.
- Companion dog.

Boston Terrier:

He can adapt to apartment life but needs regular exercise. He is clean and needs daily brushing. His eyes and the folds of his face must be cleaned

- Companion dog.
- Baiting.

Bouvier des Flandres:

This rustic breed is accustomed to living outdoors, tough guard work and herding cattle.

This dog is not made for city living. He needs space and a lot of exercise. Regular brushing is required.

- Herder.
- Guard dog.
- Pet.

Boxer:

The boxer can make a good house dog, but he must be given a considerable amount of exercise. His short coat requires little care.

- Guard dog
- Defense dog
- Utility dog: police dog, guide dog.
- Pet.
- Baiting.

Briard:

This robust, active, powerful dog needs lots of space and exercise. He is not a city-dweller. His coat should be brushed and combed regularly to keep it mat-free: two to three times per week if he is an outdoor dog; once per week if he is an indoor dog.

- Sheepdog.
- Handsome pet.

Brittany:

With an excellent nose, he tracks rapidly, points firmly, and is a very good waterfowl retriever.

He can adapt to apartment life as long as he gets long, daily walks to let off steam. He requires brushing once or twice a week, as well as regular attention to the ears.

- Hunting dog.
- Companion dog.

Brussels Griffon:

The Brussels Griffon is well-suited to apartment life but does not like being left alone. This very clean dog requires regular brushing and must be groomed every three months to maintain his handsome appearance. He does not tolerate heat well. His eyes must be checked regularly.

- Companion dog.

Bull Terrier:

This breed adapts well to life as a house dog but does not like to be left alone and requires plenty of exercise. Weekly brushing is required.

- Guard dog.
- Pet.
- Baiting.

Bulldog:

The bulldog can adapt to city living provided he exercises regularly. He does not tolerate heat well. Daily brushing is required. Special attention must be given to the folds on his face to ward off possible skin irritation.

- Guard dog.
- Police dog, army dog.
- Pet.
- Baiting.

Bullmastiff:

The bullmastiff is not a good house dog. He needs a lot of space and exercise. Regular brushing of the coat and cleaning of his folds are required.

- Guard dog.
- Defense dog.
- Police dog, army dog.
- Pet.
- Baiting.

Cairn Terrier:

This excellent swimmer hunts otter and vermin.

Though the cairn terrier is more at home in the country than in the city, he can adapt well to any environment. This small dog needs regular outings and plenty of exercise. Brushing two or three times per week is required.

- Hunting dog
- Pet.

Canaan Dog:

He is a good defense dog, though is not naturally aggressive towards humans.

The canaan dog needs exercise and room to run. Regular brushing is required.

- Herder.
- Guard dog.
- Utility dog: army dog, guide dog.
- Pet.

Cardigan Welsh Corgi:

This dog adapts readily to living indoors provided he receives regular exercise and room to run. The cardigan requires regular brushing.

- Utility dog: assistant, drug search, rescue.
- Guard dog.
- Pet.

Cavalier King Charles Spaniel:

He adapts well to city life but needs long walks. He does not like being left alone and he cannot tolerate cold and dampness. He requires brushing and combing two or three times a week, but no grooming. His ears and eyes must be checked regularly.

- Hunting dog.
- Companion dog.

Chesapeake Bay Retriever:

Tough, very hardy, tireless, courageous and lively, the Chesapeake bay retriever is a remarkable swimmer, even in icy waters. He is used on duck.

He needs space and lots of exercise, as well as regular brushing.

- Hunting dog.
- Retriever.

Chihuahua:

He is an apartment dog who needs daily walks. He is sensitive to the cold. His eyes need regular attention and his teeth should be checked regularly for tarter build-up. He needs regular brushing.

- Watch dog.
- Companion dog.

Chinese Crested:

He should live inside but needs daily walks. He is sensitive to cold and does not like being left alone. He needs regular baths.

- Companion dog.

Chinese Shar-Pei:

This breed makes a good house dog as long as daily exercise is provided. Weekly brushing is sufficient. This dog must be kept extremely clean and the folds in his loose skin require special care.

- Guard dog.
- Hunting dog.
- Pet.

Chow Chow:

The chow chow can adapt to life in the city provided he gets out for long daily walks. Daily brushing and combing are required for this very clean dog. A curry brush is needed during seasonal shedding. The chow chow despises being tied up and does not tolerate heat well.

- Hunting dog.
- Draft dog.
- Herder.
- Pet.

Clumber Spaniel:

He is a good flusher of rabbit, woodcock and pheasant. He is a good retriever, fearing neither brambles nor water.

Preferably, he should live in the country. He needs space and exercise, as well as frequent brushing and regular attention to the ears.

- Hunting dog
- Retriever.
- Companion dog.

Cocker Spaniel:

He can adapt to apartment life, as long as he is taken on daily walks. He requires daily brushing and combing, bimonthly bathing and monthly grooming. His ears need regular attention.

- Companion dog.

Collie:

The collie can live in the city but will be happier with a yard and space to run. Regular exercise is required. Brushing two times per week is adequate.

- Sheepdog.
- Police dog.
- Guide dog.
- Pet.

Curly-Coated Retriever:

He is not suited to city life because he needs lots of exercise. He does not like being confined or left alone. He must be brushed twice weekly.

- Hunting dog.
- Retriever.
- Excellent swimmer.

Dachshund:

The dachshund is well-suited to life as a house dog, particularly the longhaired variety. However, this small dog needs plenty of exercise to maintain his mental health.

- Hunting dog.
- Guard dog.
- Pet.

Dalmation:

He can live in an apartment as long as he gets enough exercise. He needs regular brushing. Puppies are born all white; spots appear gradually and are not fully developed until the dog is one year old.

- Companion dog.
- Seeing-eye dog.
- Watchdog.

Dandie Dinmont Terrier:

The dandie dinmont terrier can adapt to life as a house dog if he gets long daily walks. Brushing two or three times per week is required. This breed should be professionally groomed two times per year.

- Vermin hunting dog.
- Pet.

Doberman Pinscher:

This dog needs space and exercise to burn off energy. He will not tolerate being tied up. Regular brushing is required.

- Working dog: police dog, army dog.
- Guard dog.
- Defense dog.
- Pet.

English Cocker Spaniel:

He can live in an apartment, but long, daily walks are necessary. He requires brushing and combing twice weekly and grooming twice or three times per year. His ears must be checked regularly.

- Hunting dog.
- Tracking dog.
- Retriever.
- Companion dog.

English Foxhound:

For a pack of dogs in the country, kennel life is best. Apartment life is not ideal. The English foxhound does not like to be alone or idle. He requires regular brushing.

- Hunting dog.
- Tracking dog.
- Digging.

English Setter:

He needs space and exercise. He does not like being confined. He requires brushing twice weekly, as well as regular attention to the ears.

- Hunting dog.
- Companion dog.

English Springer Spaniel:

He is not at all suited to apartment life. He needs space and lots of exercise, as well as brushing twice weekly and regular checking of the ears.

- Hunting dog.
- Tracking dog.
- Retriever.

English Toy Spaniel:

He is an apartment dog and requires little exercise. He needs daily brushing and combing and his eyes and ears should be checked regularly.

- Companion dog.

Field Spaniel:

He is entirely unsuited to city life. If he must live in the city, he will need lots of exercise for his well-being. He also needs brushing once or twice weekly, as well as regular attention to the ears.

- Hunting dog.
- Retriever.
- Companion dog.

Finnish Spitz:

The finnish spitz can adapt easily to life as a house dog provided he gets plenty of outdoor exercise and is not left alone for extended periods. This breed is very clean. Daily brushing is required.

- Hunting dog (birds).
- Guard dog.
- Pet.

Flat-Coated Retriever:

He is not a city dweller. He needs space and exercise, as well as brushing twice weekly and regular attention to the ears.

- Hunting dog.
- Utility dog: guide dog, drug detection dog.
- Retriever.
- Companion dog.

French Bulldog:

The ideal city dog, he adapts well to apartment life. During walks, he must be taught not to pull on the leash or he may develop a poor gait. He hates being separated from his owner. Because of his overly short nose, he may have difficulty breathing, especially in hot weather. He needs daily brushing during the shedding season, as well as a bath every two months. His eyes and the folds on his face need regular attention.

- Companion dog.
- Watchdog.

German Pinscher:

This is a very clean breed. The pinscher can live in the city if he receives a fair amount of exercise. Regular brushing is required.

- Guard dog.
- Excellent ratter.
- Pet.

German Shepherd Dog:

Early training is vital. This is an active dog with a need for space daily. This breed does not like to be alone and cannot tolerate being closed inside all day. Brushing twice per week is required. Above all a working dog.

- Herder.
- Army dog.
- Tracker.
- Search and rescue.
- Guard dog.
- Guide dog.
- A loyal, affectionate pet.

German Shorthaired Pointer:

He can adapt to city life but needs space and exercise, including long daily outings. He also needs regular brushing and checking of the ears.

- Hunting dog.
- Tracking dog.
- Watchdog.
- Companion dog.

German Wirehaired Pointer:

He can live in the city, though not ideal, as long as he gets two long walks a day. He also requires brushing several times a week and attention to the ears.

- Hunting dog.
- Tracking dog.
- Companion dog.

Giant Schnauzer:

Schnauzers should not be confined indoors. They are active dogs and need space and considerable exercise to stay fit and maintain their mental health. Daily brushing and professional grooming once every three months is required.

- Guard dog.
- Defense dog.
- Ratter, vermin hunter.
- Pet.

Golden Retriever:

He is not suited to apartment life because he needs lots of exercise. He hates being left alone. He requires brushing once or twice weekly, as well as combing during seasonal shedding.

- Hunting dog.
- Utility dog: guide dog, wreckage search dog, drug detection dog.
- Retriever.
- Companion dog.

Gordon Setter:

He adapts fairly well to city life. He needs space and lots of exercise, as well as brushing and attention to the ears.

- Hunting dog.
- Retriever.
- Companion dog.

Great Dane:

The great dane can be content living in an apartment, but he must get out daily to stretch his long legs. This athletic dog needs space and exercise. However, he should not exercise too vigorously until he has stopped growing, or he may damage his joints and ligaments. This dog has a short life expectancy of only eight years.

- Excellent guard dog.
- Pet.
- Baiting.

Great Pyrenees:

This dog is not suited for city life. He needs exercise and room to run, or he will develop behavioral problems. He does not like to be shut in. brushing three times per week and bathing several times per year are required.

- Flock guard.
- Guard dog.
- Pet.

Greater Swiss Mountain Dog:

The greater swiss mountain dog is not suitable as a house dog. He needs a lot of exercise and room to run. Regular brushing is required.

- Cattle drover.
- Draft dog.
- Guard dog.
- Rescue dog.
- Pet.

Greyhound:

He needs space and must run every single day. He requires daily brushing.

- Hunting dog.
- Racing dog.
- Companion dog.

Harrier:

He is not a city dweller and does not like to be left alone. A natural pack hound, he is well-suited to kennel life. He needs daily exercise and requires regular brushing and attention to the ears.

- Hunting dog.
- Tracking dog.
- Digging.

Havanese:

This apartment dog does not require daily brushing and combing. Any kind of grooming, trimming, or stripping is not allowed.

- Watchdog.
- Companion dog.

Ibizan Hound:

It is not recommended that this breed be kept as a house dog. The ibizan hound needs considerable exercise and room to run. Regular brushing is required.

- Hunting dog.
- Retriever.
- Pet.

Irish Setter:

To live in the city, he needs lots of exercise for his physical and emotional well-being. He requires daily brushing and regular attention to the ears.

- Hunting dog.
- Companion dog.

Irish Terrier:

This dog can adapt to life as a house dog, but he requires considerable space and exercise. Brushing once or twice per week is required. This breed should be groomed two times per year.

- Hunting dog (shooting and with hounds)
- Guard dog.
- Pet.

Irish Water Spaniel:

He needs wide open spaces and lots of exercise, as well as combing twice weekly and regular checking of the ears.

- Hunting dog.
- Retriever.
- Excellent swimmer.

Irish Wolfhound:

He should not live in the city. He needs to run often in wide open spaces. He must be brushed weekly.

- Hunting dog.
- Watchdog.
- Companion dog.

Italian Greyhound:

He can adapt to city life but needs exercise. He does not like being left alone and cannot tolerate cold weather or rain. He requires regular brushing.

- Hunting dog.
- Companion dog.

Jack Russell Terrier:

The Jack Russell terrier can adjust to life as a house dog provided he gets a lot of much needed exercise. The coat requires little care.

- Hunting dog.
- Digger.
- Pet.

Japanese Chin:

He is a very clean apartment dog. He requires daily brushing and cannot tolerate intense heat. His ears and eyes must be checked regularly.

- Companion dog.

Keeshond:

The keeshond is an excellent guard dog. Small spitz adjust to city living better than the keeshond (wolfspitz). Brushing twice per week is required.

- Guard dog.
- Pet.

Kerry Blue Terrier:

The kerry blue terrier can adapt to life indoors but he requires plenty of daily exercise. Regular brushing is required. This breed should be professionally groomed three or four times a year.

- Hunting dog (rabbit, vermin, etc.).
- Guard dog.
- Utility dog: police dog.
- Pet.

Komondor:

This dog is not suitable as a house dog; he needs space and a lot of exercise. Komondors are never brushed. The komondor should be bathed only once or twice per year.

- Sheepdog.
- Guard dog (can be aggressive)
- Pet.

Kuvasok:

This loyal dog meets any challenge head on. He is hardy and serious and not overly demonstrative. The kuvasok has a keen sense of smell, which he used in the past to hunt wolf and wild boar.

This dog is not a cit-dweller. He needs space and exercise. Daily brushing is required.

- Sheepdog.
- Guard dog, police dog.
- Pet.

Labrador Retriever:

He does not like being left alone. He needs lots of exercise to curb his restlessness. He must be brushed two to three times per week and combed during shedding season.

- Hunting dog.
- Utility dog: guide dog, drug detection dog.
- Retriever.
- Companion dog.

Lakeland Terrier:

This breed can adapt to life in the city, but requires considerable exercise. Daily brushing is required. This breed should be professionally groomed three times per year.

- Hunting dog.
- Guard dog. (flocks mainly)
- Pet.

Lhasa Apso:

He can live in an apartment, but he loves to walk. He does not like being left alone. He requires daily dematting, brushing and combing, as well as monthly bathing and regular attention to the eyes.

- Companion dog.
- Watchdog.

Lowchen:

He adapts well to apartment life, as long as he is walked daily. He also needs daily brushing.

- Companion dog.
- Watchdog.

Maltese:

He can live in an apartment and needs limited exercise. He does not like being left alone. He requires daily dematting and brushing, as well as regular baths and grooming twice a year. His ears and eyes should be checked regularly.
- Companion dog.

Manchester Terrier:

The Manchester terrier adjusts well to life as a house dog. Daily brushing is required. This breed is a good ratter.

- Ratter, vermin hunter.
- Guard dog.
- Pet.

Mastiff:

This peaceable, gentle dog is affectionate with his owner and children. Courageous and not easily swayed, he is a guard dog through and through.

The mastiff needs a lot of space and exercise. Regular brushing is required.

- Guard dog.
- Pet.
- Baiting.

Miniature Bull Terrier:

Bull Terrier:

This breed adapts well to life as a house dog but does not like to be left alone and requires plenty of exercise. Weekly brushing is required.

- Guard dog.
- Pet.
- Baiting.

Miniature Pinscher:

This is a very clean breed. The pinscher can live in the city if he receives a fair amount of exercise. Regular brushing is required.

- Guard dog.
- Excellent ratter.
- Pet.

Miniature Schnauzer:

Schnauzers should not be confined indoors. They are active dogs and need space and considerable exercise to stay fit and maintain their mental health. Daily brushing and professional grooming once every three months is required.

- Guard dog.
- Defense dog.
- Ratter, vermin hunter.
- Pet.

Newfoundland:

The Newfoundland can adapt to life as a house dog provided he is not left alone too often. He needs room to romp. This breed does not tolerate heat well. Brushing twice per week is sufficient.

- Water rescue dog.
- Retriever.
- Pet.

Norfolk Terrier:

The Norfolk terrier can live in a city if he gets out often to burn off excess energy. Daily brushing is required. This breed should be professionally groomed two to four times per year.

- Hunting dog.
- Pet.

Norwegian Elkhound:

The Norwegian elkhound is not suited to life in the city. He needs a lot of room to run and burn off his energy, preferably in the forest. Daily brushing and combing are required.

- Herder.
- Sled dog.
- Utility dog: Army dog.
- Pet.

Norwich Terrier:

The Norfolk can live in a city if he gets plenty of exercise. Brushing and combing three times per week is required. This breed should be professionally groomed two to four times per year.

- Hunting dog.
- Pet.

Old English Sheepdog:

The Old English Sheepdog can adapt to city life in an apartment if he is always with his owner and can have time to run each day. He does not bear the heat well. This intelligent dog has a mind of his own, and therefore needs firm training. Daily brushing is very important to keep his profuse, shaggy coat from knotting.

- Sheepdog.
- Defense dog.
- Pet.

Otterhound:

Otterhounds need lots of exercise and weekly brushing.

- Hunting dog.
- Great swimmer.
- Digger.
- Companion dog.

Papillon:

He adapts well to city life. He is very clean and requires daily brushing and combing. He cannot tolerate intense heat. His drop ears need regular checking.

- Companion dog.

Pekingese:

He is happy living in an apartment. Not highly athletic, he needs only short daily walks. He requires daily brushing and combing and his eyes and the folds on his face must be checked regularly.

- Companion dog.
- Watchdog.

Pembroke Welsh Corgi:

This dog adapts readily to living indoors provided he receives regular exercise and room to run. The cardigan requires regular brushing.

- Utility dog: assistant, drug search, rescue.
- Guard dog.
- Pet.

Petit Basset Griffon Vendeen:

Vendeen griiffons are not city dwellers. They are better suited to country life, because they need space and lots of exercise. They require regular brushing and attention to the ears.

- Hunting dog.
- Companion dog.

Pharaoh Hound:

The Pharaoh hound is not suited to life as a house dog. He needs frequent exercise. Regular brushing is required.

- Hunting dog (rabbit, hare, pheasant, etc.).
- Pet.

Plotts:

The plot hound hunts wolf, puma, coyote, wildcat, deer, bear and wild boar.

- Hunting dog.

Pointer:

If he lives in the city he needs long, daily walks. He tolerates heat well. He needs regular brushing and attention to the ears.

- Hunting dog.
- Companion dog.

Polish Lowland Sheepdog:

This sheepdog can adjust to city living if he is given a lot of exercise. Brushing once or twice per week is required.

- Sheep dog
- Guard dog.
- Pet.

Pomeranian:

Small spitz adjust to city life better than larger varieties. Brushing twice per week is required.

- Guard dog.
- Pet.

Poodle:

He is just as happy in the country as in the city. He hates being left alone. He is very clean and needs daily brushing and combing, as well as one or two baths per month. His ears must be checked regularly and he requires grooming every two months.

- Companion dog.
- Hunting dog.
- Excellent swimmer.

Portuguese Water Dog:

This is not a city-dweller. This dog needs space and exercise. Weekly brushing is adequate.

- Hunting dog.
- Watchdog.
- Guard dog.
- Pet.

Pug:

He is perfectly suited to apartment life. Not an athlete, he can survive on short walks. He hates being left alone or separated from his owner. He should be kept out of intense heat. His eyes are sensitive to dust and need regular checking, as do the wrinkles on his face. He must be brushed twice or three times a week.

- Companion dog.

Puli:

This dog can adapt to living indoors, but he needs exercise. No brushing is required. This dog should be bathed only when he is dirty.

- Excellent Herder.
- Hunting dog.
- Retriever.
- Guard dog.
- Pet.

Rhodesian Ridgeback:

He is not suited to city life. He needs lots of exercise. He is resistant to heat and cold and can tolerate a lack of water or food. He should be brushed twice a week.

- Hunting dog.
- Watchdog, police dog.
- Companion dog.

Rottweiler:

The rottweiler reflects the personality of his owner. If treated cruelly, he can develop into a ferocious weapon.

The rottweiler requires considerable space and exercise. He does not like to be closed in or tied up. This breed does not tolerate heat well. Daily brushing is required.

- Guard dog.
- Police and army dog.
- Baiting.

Saint Bernard:

This breed requires considerable space and long walks every day. Energetic daily brushing is required. The saint Bernard does not tolerate heat well.

- Guard dog.
- Mountain rescue dog.
- Pet.

Saluki:

He can live in an apartment but needs long, daily walks and frequent opportunities to run. He is clean and requires brushing twice a week.

- Hunting dog.
- Watchdog.
- Companion dog.

Samoyed:

The Samoyed must not be closed up indoors. He needs space and room to run. Daily brushing is required. A curry comb is necessary during seasonal shedding.

- Hunting dog.
- Sled dog.
- Guard dog.
- Pet.

Schipperke:

Highly trainable, this is an ideal house dog, though he does require regular exercise. He should be brushed and combed two or three times per week.

- Ratter and vermin hunter.
- Guard dog.
- Pet.

Scottish Deerhound:

He is not suited to apartment life. He prefers to live outdoors, where he can get lots of exercise. He does not tolerate heat well and he requires regular brushing.

- Hunting dog.
- Companion dog.

Scottish Terrier:

The Scottie can adapt to life as a house dog provided he gets out for daily walks to burn off his abundant energy. Frequent brushing is required. This breed should be professionally groomed three to five times per year.

- Hunting dog.
- Guard dog.
- Pet.

Sealyham Terrier:

The Sealyham terrier can adapt to life as a house dog if he is exercised every day. Daily brushing and combing are required. Professional grooming is necessary.

- Hunting dog.
- Watch dog.
- Pet.

Shetland Sheepdog:

This active, alert, happy and easy going dog is affectionate, gentle and easy to train.

Brushing two times per week is required, more often during seasonal shedding. Do not bathe this breed more than once per month. Daily walks are necessary.

- Sheepdog.
- Pet.

Shiba Inu:

The shiba inu adapts well to life as a house pet. However, this is a sporting breed and therefore requires long, frequent walks. Daily brushing is needed for this very clean dog.

- Hunting dog (birds and small game).
- Guard dog.
- Pet.

Shih Tzu:

He was meant for the city but needs exercise, including daily walks. He does not like being left alone. He requires daily brushing and combing. It is strongly recommended that the hair on his head be tied back out of his eyes. He needs a monthly bath and regular checking of the eyes. He cannot tolerate intense heat.

- Companion dog.
- Watchdog.

Siberian Husky:

This breed is made for the great outdoors and will be very unhappy if kept indoors. The Siberian husky needs intense exercise to maintain mental health. Weekly brushing is required. Currying is required during seasonal shedding.

- Sled dog (light loads at moderate speeds over great distances).
- Pet. (very sociable)

Silky Terrier:

This very clean breed is well suited for life as a house dog provided he gets out often for long walks. Regular brushing and combing are required.

- Hunting dog.
- Ratter.
- Pet.

Skye Terrier:

The Skye terrier loves the great outdoors, but he can adapt to life in the city if he goes for long walks every day. This breed does not like to be closed in or tied up. Regular brushing and combing are required.

- Pet.

Smooth Fox Terrier:

The fox terrier can adapt to life in the city, but he requires considerable exercise to prevent him from becoming excessively nervous. This breed does not like to be tied up or closed in. weekly brushing is sufficient for the smooth variety.

- Hunting dog.
- Guard dog.
- Pet.

Soft Coated Wheaten Terrier:

This dog is not a good choice as a house dog. He needs considerable space and exercise to maintain his mental health. Regular brushing is required. Grooming may be required from time to time.

- Livestock guard.
- Hunting dog.
- Guard dog.
- Pet.

Spinone Italiano:

He needs wide open spaces and lots of exercise, as well as regular brushing and attention to the ears.

- Hunting dog.
- Companion dog.

Staffordshire Bull:

The Staffordshire bull terrier can adapt to life as a house dog if he gets plenty of exercise. Regular brushing is required.

- Guard dog.
- Baiting dog.
- Pet.

Standard Schnauzer:

Schnauzers should not be confined indoors. They are active dogs and need space and considerable exercise to stay fit and maintain their mental health. Daily brushing and professional grooming once every three months is required.

- Guard dog.
- Defense dog.
- Ratter, vermin hunter.
- Pet.

Sussex Spaniel:

He needs space and exercise, as well as daily brushing and combing and regular checking of the ears.

- Hunting dog.
- Tracking dog.
- Companion dog.

Tibetan Spaniel:

He is well-suited to apartment life, as long as he is walked daily. He needs regular brushing.

- Companion dog.
- Watchdog.

Tibetan Terrier:

He can live in an apartment. He is athletic and needs exercise. He also requires daily brushing and combing.

- Companion dog.
- Watchdog.
- Herder.

Toy Fox Terrier:

Lively and alert, he is a ratter and is also trained as a service dog for the handicapped.

- Hunting dog.
- Guide dog.
- Pet.

Vizsla:

He needs space and exercise, as well as regular brushing and checking of the ears.

- Hunting dog.
- Retriever.
- Companion dog.

Weimaraner:

He can adapt to apartment life but needs daily walks. He also requires regular brushing and checking of the ears.

- Hunting dog.
- Watchdog.
- Defense dog.
- Companion dog.

Welsh Springer Spaniel:

He is not suited to apartment life. He needs space and lots of exercise, as well as brushing twice weekly and regular checking of the ears.

- Hunting dog.
- Pet.

Welsh Terrier:

The breed was used in Wales working in packs to hunt, badger and otter.

The welsh terrier can adapt to life in the city provided he can go for long walks every day. Brushing once or twice per week is required professional grooming two to four times a year is needed.

- Hunting dog.
- Pet.

West Highland White Terrier:

This little dog adjusts well to life as a house dog provided he gets long walks. Daily brushing is required. Maintaining the white coat requires special care.

- Hunting dog.
- Pet.

Whippet:

He can adapt to the city but needs lots of exercise for his well-being. He does not like being left alone and cannot tolerate the cold. He is very clean and needs brushing once or twice a week.

- Racing dog.
- Companion dog.

Wire Fox Terrier:

The fox terrier can adapt to life in the city, but he requires considerable exercise to prevent him from becoming excessively nervous. This breed does not like to be tied up or closed in. the wire variety requires brushing two or three times per week and grooming three times per year.

- Hunting dog.
- Guard dog.
- Pet.

Wirehaired Pointing Griffon:

He can live in the city, though not ideal, as long as he gets two long walks a day. He also requires brushing several times a week and attention to the ears.

- Hunting dogs.
- Companion dog.

Yorkshire Terrier:

With his dominant personality, the Yorkie will not hesitate to attack another dog, even larger ones.

The Yorkie is well suited to indoor living, but this sporting dog requires exercise. Daily brushing and combing are required. This breed should be professionally groomed monthly.

- Pet.

All pictures published by American Kennel Club at www.akc.org

Pictures and Description of Current Dog Park Equipment

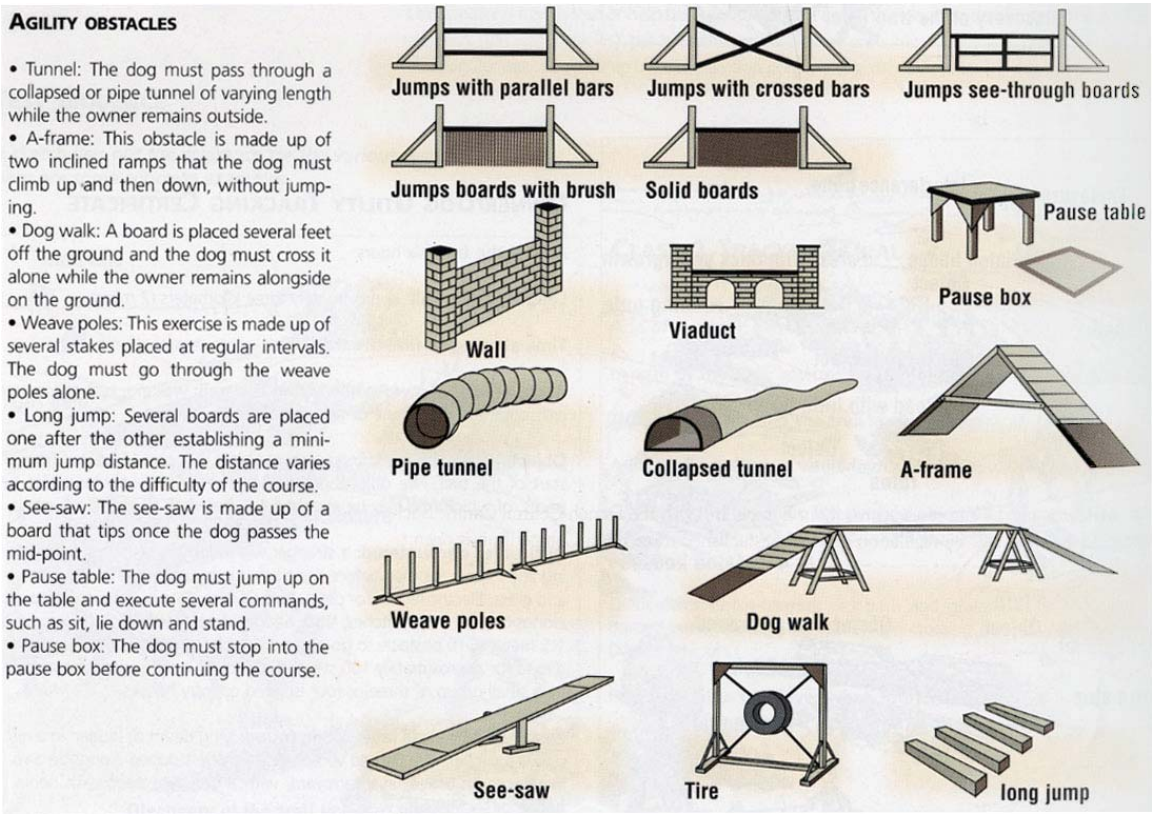

Picture published by Royal Canin